/ Perfect Charging / Perfect Welding / **Solar Energy**

Fronius Datamanager 2.0
Fronius Datamanager Box 2.0

EN-US

Operating Instructions

System monitoring

42,0426,0191,EA 015-22042020

Fronius prints on elemental chlorine free paper (ECF) sourced from certified sustainable forests (FSC).

Table of contents

EN-US

General information 7

General 9
General 9
Available Versions of Fronius Datamanager 2.0 9
Applicable DATCOM Components 9
Prerequisites for Operation 9
Inverter software required 10
Notes regarding radio certification 11
Scope of Supply 12
Using the Sticker Labels 13
Configuration Examples 14
Calculating the data volume 16
General 16
Firmware Versions for Calculating the Data Volume 16
Calculating Data Volumes 16
Calculation Examples 17
General information for the network administrator 19
Requirements 19
General Firewall Settings 19
Sending Service Messages via a DSL Internet Connection 19
Using Fronius Solar.web and Sending Service Messages 20
Controls, connections and indicators 21
Safety 21
Controls, Connections and Indicators 22
Schematic Connection of I/Os 26
Technical data 28
Technical Data 28

Installing Fronius Datamanager 2.0 31

Inserting Fronius Datamanager 2.0 into an Inverter 33
General 33
Safety 33
Fronius Datamanager 2.0 Plug-in Positions 33
Installing and connecting WLAN antennas 35
General 35
Fronius IG, Fronius IG Plus, Fronius IG Plus V, Fronius CL: Installing and Connecting Antennas 35
Fronius IG USA, Fronius IG Plus USA, Fronius IG Plus V USA: Installing and Connecting Antennas 36
Installing Fronius Datamanager 2.0 in Fronius Solar Net 39
Safety 39
Installing Inverters with Fronius Datamanager 2.0 in Fronius Solar Net 39
Installing Fronius Datamanager Box 2.0 in Fronius Solar Net 40
Fronius Solar Net Cabling 42
Fronius Solar Net clients 42
Fronius Solar Net Client Cabling 42
Requirements for the Solar Net Data Cables 42
Preassembled data cables 43
Installing Fronius Datamanager 2.0 – Overview 44
Safety 44
Starting for the first time via the Fronius Solar.web App 44
Starting for the first time via a web browser 46

Establishing a Connection to Fronius Datamanager 2.0 51

Connecting to Fronius Datamanager 2.0 via a Web Browser 53
General 53
Requirements 53
Establishing a Connection to Fronius Datamanager 2.0 via a Web Browser 53

Connecting to Fronius Datamanager 2.0 via the Internet and Fronius Solar.web 54
General 54
Function Overview 54
Requirements 54
Accessing Data from Fronius Datamanager 2.0 via the Internet and Fronius Solar.web 54

Current Data, Services, and Settings on Fronius Datamanager 2.0 55

The Fronius Datamanager 2.0 Website 57
Fronius Datamanager 2.0 Website – Overview 57
Login 57
Reset password 57
The Settings menu 58
Other setting options 58
Current Data in Fronius Datamanager 2.0 60
Current Comparison View 60
System Overview 60
Inverter/Sensor View 60
Services – System Information 61
System Information 61
Services – Network Diagnostics 62
Network Diagnostics 62
Services – Firmware Update 63
General 63
Automatic Update Search 63
Manual Update Search 63
Firmware Update via Web 63
Firmware Update via LAN 63
Services – Opening Wizards 65
Opening Wizards 65
Settings – General 66
General 66
Settings – Passwords 67
General 67
Passwords 67
Settings – Network 68
Internet via WLAN 68
Internet via LAN 68
Local Network via Access Point 68
Settings – Fronius Solar.web 69
Solar.web 69
Memory capacity 69
Calculating memory capacity 69
Calculation example 69
Settings - IO Mapping 71
General 71
AUS – Demand Response Modes (DRM) 71
IO control 72
Load management 72
Settings - load management 73
General 73
Load management 73
Settings – Push Service 74
Push Service 74
Modbus Settings 75
General 75
Additional Information on the Modbus Function 75
Data Output via Modbus 75
Limit Control 77
Save or Reject Changes 77
Settings – Inverter 78
Inverter 78
Settings – Fronius Sensor Cards 79
Sensor Cards 79

Settings – Counter 80
General 80
Fronius Smart Meter 80
Connecting the Fronius Smart Meter to the Fronius Datamanager 2.0 81
S0 Inverter 81
Settings – DNO Editor 83
General 83
DNO Editor – IO Control 83
Connection example 84
UC Editor – AUS – Demand Response Modes (DRM) 85
UC Editor – Dynamic Power Reduction 85
UC Editor – Control priorities 85

General information

General

General

The Fronius Datamanager 2.0 is a network-compatible datalogger which combines the functionality of the Fronius Com Card, the Fronius Datalogger Web, the Fronius Power Control Card, and the Fronius Modbus Card on one plug-in card.
The Fronius Datamanager 2.0 website provides a quick overview of the photovoltaic system.
The website can be accessed with a web browser via a direct connection or on the internet, if properly configured.

When connected to Fronius Solar.web, the real-time and archived data of a photovoltaic system can be easily accessed via the internet or the Fronius Solar.web app. No difficult configuration is required. Data is sent automatically from the Fronius Datamanager 2.0 to Fronius Solar.web. Fronius Solar.web is equipped with an easy-to-configure system monitoring feature with an automatic alarm. The alarm can be signaled via SMS or e-mail.

Available Versions of Fronius Datamanager 2.0

Fronius Datamanager 2.0 is available in the following versions:

- without Fronius Com Card function
  (for Fronius Galvo Fronius Symo, and Fronius Primo inverters)

- with Fronius Com Card function
  (for Fronius IG, Fronius IG Plus, Fronius IG Plus V,
  Fronius IG Plus A, Fronius CL, Fronius CL USA, Fronius IG 300–500 inverters)

- in external housing with Fronius Solar Net IN and Fronius Solar Net OUT connection sockets
  (Fronius Datamanager Box 2.0, e.g. for inverters without plug-in card slots or for photovoltaic systems with a separate Fronius Datamanager 2.0)

Provided that the inverter is not fitted as standard with Fronius Datamanager 2.0, existing inverters can be upgraded with the Fronius Datamanager 2.0 plug-in card.

Applicable DATCOM Components

The Fronius Datamanager 2.0 plug-in card installed in the inverter or the separate Fronius Datamanager Box 2.0 can be operated with the following DATCOM components:

- up to 100	x	Fronius inverters (incl. the inverter in which Fronius Datamanager 2.0 is installed)
- up to 10	x	Fronius Sensor Card or Fronius Sensor Box
- up to 10	x	Fronius Public Display Card or Fronius Public Display Box
- up to 1	x	Fronius Interface Card or Fronius Interface Box
- up to 200	x	Fronius String Control

Prerequisites for Operation

In order to ensure flawless data exchange online, it is essential to use an appropriate internet connection:
- For cabled internet solutions, Fronius recommends a download speed of at least 512 kbit/s and an upload speed of
  at least 256 kbit/s.
- For solutions with mobile internet services, Fronius recommends a minimum transmission standard of 3G with reliable signal strength.

These specifications do not provide an absolute guarantee of flawless operation.
High error rates in transmission, fluctuating reception or dropouts can have an adverse effect on the online operation of Fronius Datamanager 2.0.
Fronius recommends on-site testing to ensure that the connections meet the minimum requirements.

For operation with an antenna extension. If you want to connect your inverter to the Internet using WLAN, we recommend the following approach:
- Test your signal strength in the exact position where the inverter is to be installed and make sure the Datamanager 2.0 card is activated.
- Connect to the WLAN network using a smartphone, laptop or tablet and test the connection. The free website "www.speedtest.net" can be used to check whether the connection meets our recommended download speed of at least 512 kbit/s and an upload speed of 256 kbit/s.

Since Fronius Datamanager 2.0 acts as a data logger, no other data logger may be present in the Fronius Solar Net ring.
Only have one Fronius Datamanager 2.0 for each Fronius Solar Net ring.
Fronius Datamanager 2.0 must be in slave mode if existing in inverters Fronius Galvo and Fronius Symo.

The following DATCOM components may not be operated together with Fronius Datamanager 2.0 in a Fronius Solar Net ring:
- Fronius Power Control Card/Box
- Fronius Modbus Card
- Fronius Datalogger Web
- Fronius Personal Display DL Box
- Fronius Datalogger easy/pro
- Fronius Datamanager
- Fronius Datamanager 2.0 Box

To use Fronius Datamanager 2.0
- the plug-in card must be installed in an inverter,
  or
- there must be a Fronius Datamanager Box 2.0 in the Fronius Solar Net ring.

The Fronius Datamanager 2.0 plug-in card and the Fronius Com Card may not be used together in one inverter.

Inverter software required

Fronius Datamanager 2.0 requires the following inverter software versions for its operation:

Inverter	required software version according to display (MainControl)
Fronius IG 15–60	V2.9.4 or higher
Fronius IG 2000–5100	starting from series no 19153444
Fronius IG 300–500	V3.6.4.0 or higher
Fronius IG Plus 35–150	V4.22.00 or higher
Fronius IG TL *	-
Fronius CL	V4.22.00 or higher
Fronius Agilo *	-
Fronius Agilo Outdoor *	-
Fronius Agilo TL *	-
Fronius Galvo	-
Fronius Symo	-
Fronius Symo Hybrid	-
Fronius Primo	-
Fronius Eco	-

* Only in conjunction with Fronius Datamanager Box 2.0

The relevant inverter software version can be downloaded for free from our homepage (http://www.fronius.com).

If you have any questions, please contact pv-support@fronius.com.

Notes regarding radio certification

The Fronius Datamanager 2.0 plug-in card and Fronius Datamanager Box 2.0 are equipped with a wireless module.

Wireless modules in the USA require FCC certification:

FCC

This device conforms to the limit values for a Class B digital device, pursuant to Part 15 of the FCC regulations. These limits are designed to provide reasonable protection against harmful interference in a residential installation. This device generates and uses high frequency energy and, if not used in accordance with the instructions, may interfere with radio communications. However, there is no guarantee that interference will not occur in a particular installation.
If this device does cause harmful interference to radio or television reception, which can be determined by turning the device off and on, the user is encouraged to try to correct the interference by one or more of the following measures:
- Reorient or relocate the receiving antenna.
- Increase the distance between the device and the receiver.
- Connect the device to a different circuit than the receiver.
- Consult the dealer or an experienced radio/TV technician for help.

FCC ID: PV7-WIBEAR11N-DF1

Industry Canada RSS

This device complies with Industry Canada license-exempt RSS standards. Operation is subject to the following two conditions:
(1) this device is not permitted to cause harmful interference, and
(2) this device must accept any interference, including interference that may cause undesired operation of the device.

IC ID: 7738A-WB11NDF1

Unless otherwise expressly permitted by the manufacturer, changes or modifications to the wireless module are not allowed and lead to a loss of the right of use of the device by the user.

Scope of Supply

Fronius Datamanager 2.0 plug-in card

- 1 x Fronius Datamanager 2.0 plug-in card
- 1 x Fronius Solar Net termination plug
- 1 x 16-pin plug
- 1 x FCC sticker label, three parts

Additional equipment depending on the inverter:

- 1 x antenna - 1 x Fronius Solar Net termination plug	Fronius Galvo Fronius Symo Fronius Primo
- 1 x antenna - 1 x 1 m RG58 antenna cable - 1 x mounting bracket - 1 x double-sided adhesive tape	Fronius IG Fronius IG Plus Fronius IG Plus V

- 1 x antenna - 1 x 3 m RG58 antenna cable - 1 x mounting bracket - 1 x double-sided adhesive tape	Fronius IG 300 - 500 Fronius CL Fronius CL - USA
- 1 x antenna - 1 x 0.4 m RG58 antenna cable - 1 x 3/4 in. screw joint - 1 x 3/4 in. hex nut - 1 x 3/4 in. seal	Fronius IG 2000 - 5100 - USA Fronius IG Plus - USA Fronius IG Plus V - USA

Fronius Datamanager Box 2.0

- 1 x Fronius Datamanager Box 2.0 with wall bracket
- 2 x Fronius Solar Net termination plugs
- 1 x 16-pin plug
- 1 x antenna
- 1 x 3 m RG58 antenna cable
- 1 x mounting bracket
- 1 x double-sided adhesive tape
- 2 x installation anchors + screws
- 1 x "DATCOM Cabling" leaflet

Using the Sticker Labels

IMPORTANT! If the three-part sticker label included in the scope of supply for the Datamanager 2.0 has not already been affixed to the inverter at the factory, this must be done now.

Position of the sticker label on the inverter:

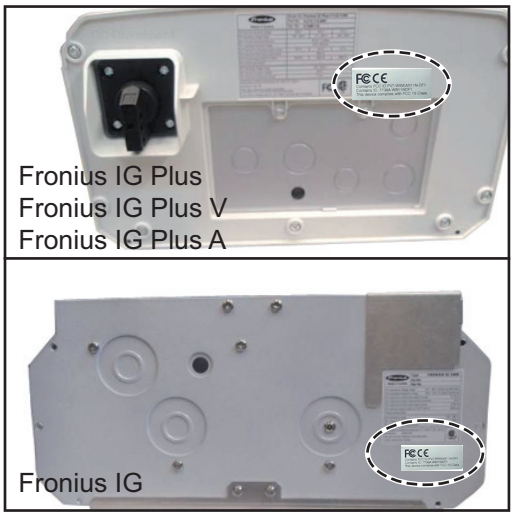

For Fronius Galvo, Fronius Symo, and Fronius Primo inverters, the sticker label information is located on the rating plate.

Using the sticker labels:

(1) On the cardboard packaging of the inverter or the Fronius Datamanager 2.0

(2) On the Fronius Datamanager 2.0 plug-in card

(3) On the inverter

Configuration Examples

Linking Inverters with a Fronius Datamanager 2.0 Plug-in Card to a PC:

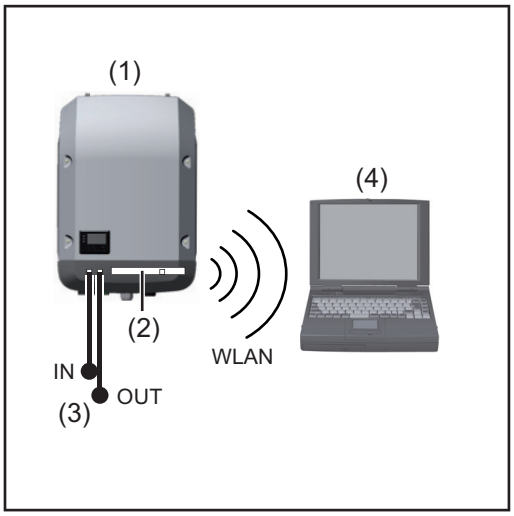

(1) Inverter
(2) Fronius Datamanager 2.0
(3) Fronius Solar Net termination plug
(4) PC/laptop

IMPORTANT! When linking an inverter with Fronius Datamanager 2.0 to a PC, one Fronius Solar Net termination plug must be connected at each free IN or OUT connection.

Linking Inverters with a Fronius Datamanager 2.0 Plug-in Card to Other Inverters, a Fronius Sensor Box, and a PC:

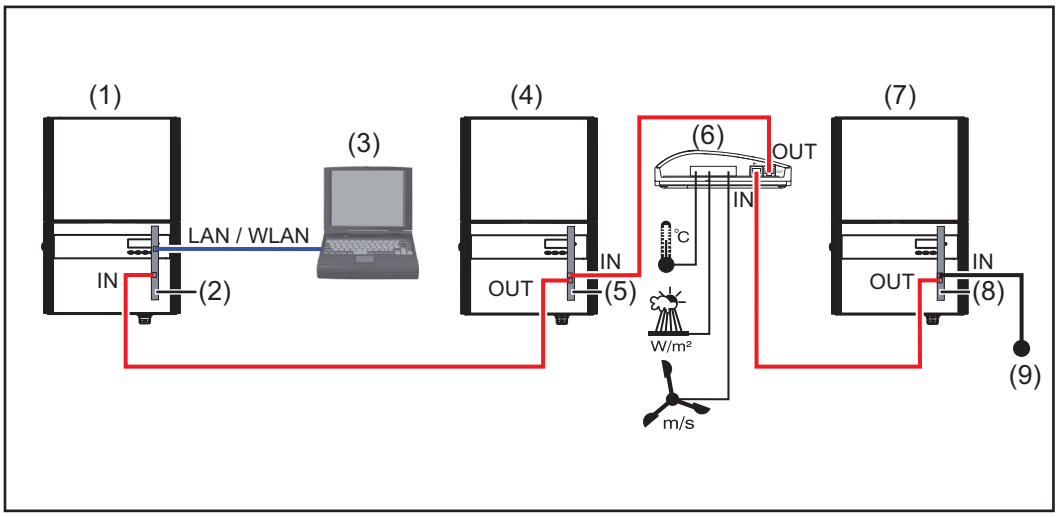

(1) Inverter with
(2) Fronius Datamanager 2.0
(3) PC/laptop
(4) Inverter with
(5) Fronius Com Card
(6) Fronius Sensor Box
(7) Inverter
(8) Fronius Com Card
(9) Fronius Solar Net termination plug

When linking several DATCOM components to Fronius Datamanager 2.0:
Use the data cable to connect the IN connection socket of Fronius Datamanager 2.0 with the OUT connection socket of the next DATCOM component. A Fronius Solar Net termination plug must be inserted into the empty IN connection socket of the last DATCOM component.
With the following inverters, the inverter with Fronius Datamanager 2.0 must always be connected either at the start or end of the data chain:
Fronius IG, Fronius IG Plus, Fronius IG Plus V, Fronius IG Plus A, Fronius CL, Fronius CL USA and Fronius IG 300–500.

Linking Two Inverters with Fronius Com Card or Com Card Function to a Fronius Datamanager Box 2.0 and a Smartphone:

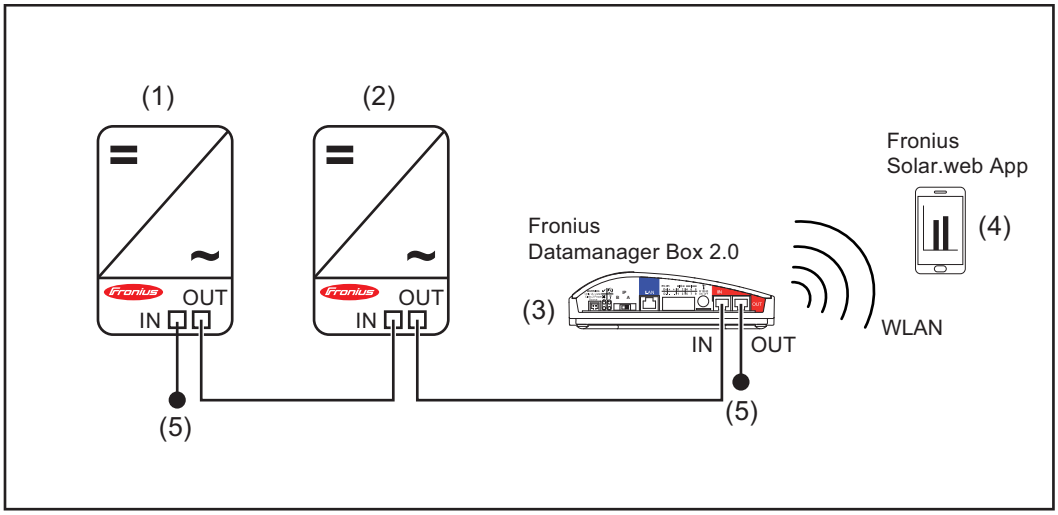

(1)	Inverter with Fronius Com Card or Com Card function	(4)	Smartphone with Fronius Solar.web App
(2)	Inverter with Fronius Com Card or Com Card function	(5)	Fronius Solar Net termination plug
(3)	Fronius Datamanager Box 2.0		

When linking several DATCOM components with a Fronius Datamanager Box 2.0, each of the DATCOM components must be cabled from the IN connection socket to the OUT connection socket of the next DATCOM component.
Fronius Solar Net termination plugs must be inserted into empty IN or OUT connection sockets of the last DATCOM components.

Calculating the data volume

General

When operating Fronius Datamanager 2.0, data is generated and needs to be transmitted online.
In order to select a suitable internet connection it is necessary to calculate the data volume.

The following data volume calculation provides an overview of the amount of data generated when operating Fronius Datamanager 2.0.

Firmware Versions for Calculating the Data Volume

The data volume calculation is based on Fronius Datamanager 2.0 firmware versions V 3.3.x-x and lower.

Higher firmware versions can cause a higher data volume due to their increased functional range.

Calculating Data Volumes

The data volume calculation depends on which Fronius Datamanager 2.0 functions are activated.

Function	Data volume	
Make real-time data available in Fronius Solar.web	Once [1]	150 bytes 32 KB/h
View real-time data in Fronius Solar.web	Current Total View per sensor card/sensor box	42 KB/h + 300 KB/h
	Current Comparison View per inverter	13 KB/h + 4 KB/h
	Home	0 KB/h
	System Comparison View	0 KB/h
Send archived data/logging data to Fronius Solar.web	(Memory sectors per day [2] x 4 KB) + 8 KB	
	Transmission time [3]	600 bytes/min
Send service messages or errors	For daily sending per service message or error	1 KB/day + 300 bytes
	For immediate sending per service message or error	1 KB

1) Only after a restart or if the internet connection has been disconnected
2) Calculation of memory sectors per day according to Chapter "Calculating Memory Capacity" on page 69
3) Depending on the quality of the internet connection

IMPORTANT: Since the values listed in the table are "rough data" for Fronius Datamanager 2.0 and the provider's bill may show discrepancies as a result of the various ways of calculating the transfer volume, the total values should be increased by 10–20%.

If the functions have been deactivated, no data volume is generated.

A certain data volume is also required to update the Fronius Datamanager 2.0 firmware. This data volume depends on the size of the relevant update package and cannot therefore be taken into account for any advance calculation of the data volume.

IMPORTANT: Fronius recommends a flat rate in order to avoid unforeseeable data volumes.

Calculation Examples

Example 1 - Home System

1 inverter; No Fronius Sensor Card/Box;	+ 0.15 KB
Fronius Datamanager 2.0 has a 24-hour internet connection	+ 32 KB/h x 24 h = 768 KB
Archived data is sent to Fronius Solar.web; 30 minutes transfer time;	+ 0.6 KB/min x 30 min = 18 KB
Inverters operate 14 h/day; 15 minutes storage interval; (This results in 1 memory sector per day in accordance with Section "Calculating Memory Capacity")	+ (1 memory sector/day x 4 KB) + 8 KB = 12 KB
Real-time data is viewed over a 15-minute period every day	+ 42 KB/h x 0.25 h = 10.5 KB
1 service message sent each day to confirm average error rate	+ 1 service message x 1 KB = 1 KB
Subtotal without safety	0.15 KB 768.00 KB 18.00 KB 12.00 KB 10.50 KB 1.00 KB 809.65 KB
A 10% safety factor is added to the calculation	809.65 KB + 10%
Final result	890.615 KB/day

Example 2 - Large System

100 inverters;	+ 0.15 KB
10 Fronius Sensor Cards/Boxes;	
Fronius Datamanager 2.0 has a 24-hour internet connection	+ 32 KB/h x 24 h = 768 KB
Archived data is sent to Fronius Solar.web;	
120 minutes transfer time;	+ 0.6 KB/min x 120 min = 72 KB
Inverters operate 14 h/day;	
5 minutes storage interval;	+ (173 memory sectors/day x 4 KB)
(This results in 173 memory sectors per day in accordance with Section "Calculating Memory Capacity")	+ 8 KB = 700 KB
The current Total View and the current Comparison View are viewed over a two-hour period every day	+ 42 KB/h x 2 h + 300 KB/h x 10 x 2 h + (13 KB/h + 100 x 4 KB/h) x 2 h = 6910 KB
50 service messages sent each day to confirm average error rate	+ 50 service messages x 1 KB = 50 KB
Subtotal without safety	0.15 KB 768.00 KB 72.00 KB 700.00 KB 6910.00 KB 50.00 KB 8,500.15 KB
A 10% safety factor is added to the calculation	8,500.15 KB + 10%
Final result	9,350.165 KB/day (approx. 9.35 MB/day)

General information for the network administrator

Requirements

Configuring a network for Fronius Datamanager 2.0 requires knowledge of network technology.

If Fronius Datamanager 2.0 is being integrated into an existing network, the Fronius Datamanager 2.0 address must be adapted to the network.

Example: network address range = 192.168.1.x, subnet mask = 255.255.255.0

- An IP address between 192.168.1.1 and 192.168.1.254 must be assigned to Fronius Datamanager 2.0.
- The IP address selected may not be already assigned in the network.
- The subnet mask must correspond to the existing network (e.g., 255.255.255.0).

If Fronius Datamanager 2.0 will be sending service messages and/or data to Fronius Solar.web, then a gateway address and a DNS server address must also be entered. Fronius Datamanager 2.0 uses the gateway address to access the internet. The IP address of the DSL router can be used as a gateway address, for example.

IMPORTANT!
- Fronius Datamanager 2.0 may not have the same IP address as the PC/laptop!
- Fronius Datamanager 2.0 cannot connect itself to the internet. A router must be used for a DSL connection to the internet.

General Firewall Settings

DSL routers mostly enable you to send data to the internet and, therefore, do not normally have to be configured.

If existing firewall rules block the connection to the Fronius system monitoring, the following firewall rules must be added:

	49049/UDP output	80/TCP *) input
Sending service messages	x	-
Connecting to Datamanager via Fronius Solar.web	x	-
Connecting to Datamanager via Fronius Solar.access or Fronius Solar.Service	-	x
Accessing the Datamanager website	-	x

Configure the firewall so that the IP address of Fronius system monitoring can send data to port 49049/UDP from “fdmp.solarweb.com”.

*) We recommend only allowing access to the web interface of the Fronius system monitoring from a secure network. If access via the internet is absolutely necessary (e.g. for service purposes during a limited time period), configure the network router so that requests for any external port are redirected to port 80/TCP.
Caution - this will make the inverter visible on the internet and more likely to be subject to network attacks.

Sending Service Messages via a DSL Internet Connection

Normally, no additional router configuration is required for a regular DSL internet connection to access Fronius Solar.web and/or send service messages, because connections from the LAN to the internet are open.

Using Fronius Solar.web and Sending Service Messages

However, an internet connection is required to use Fronius Solar.web and send service messages.

Fronius Datamanager 2.0 cannot connect itself to the internet. A router must be used for a DSL connection to the internet.

Controls, connections and indicators

Safety

WARNING!

Danger due to incorrect operation.
This can result in severe personal injury and damage to property.

- ► Do not use the functions described here until you have fully read and understood the Operating Instructions.
- ► Do not use the functions described here until you have fully read and understood all of the Operating Instructions of the system components, especially the safety rules.

Controls, Connections and Indicators

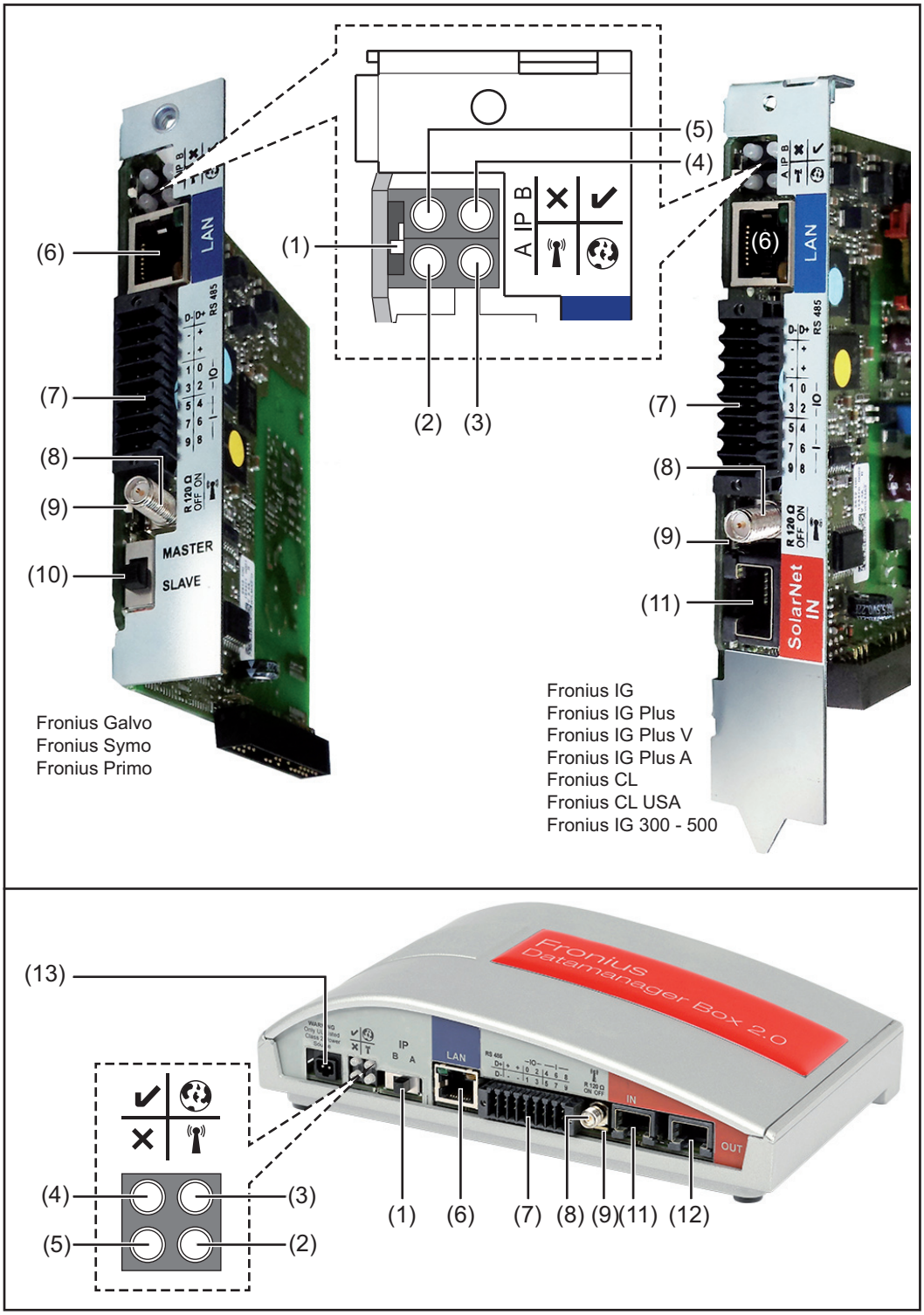

No.	Function
(1)	**IP Switch** For changing the IP address: A Specified IP address and opening the WLAN Access Point Fronius Datamanager 2.0 uses fixed IP address 169.254.0.180 for a direct connection to a PC via LAN. If the IP switch is set to position A, an Access Point for a direct WLAN connection to the Fronius Datamanager 2.0 is also opened. Access data for this Access Point: Network name: FRONIUS_240.XXXXXX Key: 12345678 The Fronius Datamanager 2.0 can be accessed: - via DNS name “http://datamanager” - via IP address 169.254.0.180 for the LAN interface - via IP address 192.168.250.181 for the WLAN Access Point B Assigned IP address: The Fronius Datamanager 2.0 works with an assigned IP address dynamic host configuration protocol (DHCP) The IP address can be set on the Fronius Datamanager 2.0 website. In the case of the Fronius Datamanager 2.0 plug-in cards, the IP switch is located underneath the LEDs and is separate in the case of the Fronius Datamanager Box 2.0.
(2)	**WLAN LED** - Flashes green: The Fronius Datamanager 2.0 is in service mode (IP switch on the Fronius Datamanager 2.0 plug-in card is set to position A or service mode was activated via the inverter display, the WLAN Access Point is opened) - Lights up green: There is an existing WLAN connection - Alternately flashes green/red: The length of time for which the WLAN Access Point is open after activation (1 hour) has been exceeded - Lights up red: There is no existing WLAN connection - Flashes red: Faulty WLAN connection - Does not light up: The Fronius Datamanager 2.0 is in slave mode
(3)	**Solar.web Connection LED** - Lights up green: There is an existing connection to Fronius Solar.web - Lights up red: There is no existing connection to Fronius Solar.web, but one is required - Does not light up: No connection to Fronius Solar.web is required
(4)	**Supply LED** - Lights up green: Sufficient power supply from Fronius Solar Net; the Fronius Datamanager 2.0 is operational. - Does not light up: No power or insufficient power supply from Fronius Solar Net—an external power supply is required or the Fronius Datamanager 2.0 is in slave mode - Flashes red: During an update process **IMPORTANT!** Do not interrupt the power supply during an update process. - Lights up red: Update process failed

No.	Function	
(5)	**Connection LED** - Lights up green: There is an active connection within Fronius Solar Net - Lights up red: There is an interrupted connection within Fronius Solar Net - Does not light up: The Fronius Datamanager 2.0 is in slave mode	×
(6)	**LAN Connection** Ethernet interface colored blue for connecting the Ethernet cable	
(7)	**I/Os** Digital inputs and outputs	

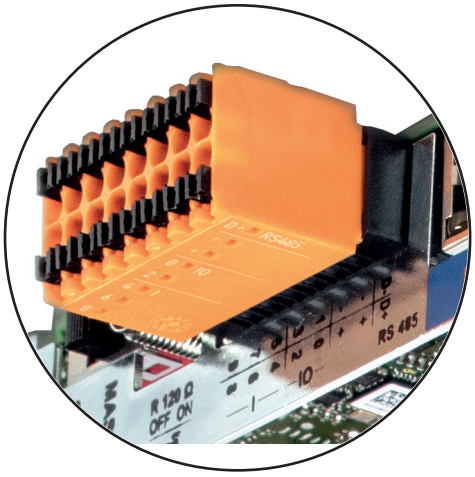

9	7	5	3	1	-	-	D-		
8	6	4	2	0	+	+	D+		
—I—			—IO—					RS485	

Modbus RTU 2-wire (RS485):

D- Modbus data -

D+ Modbus data +

Int./Ext. Power Supply

- GND

+ U_{int}/U_{ext}
Output for internal voltage 10.8 V/12.8 V
or
Input for an external supply voltage
>12.8–24 V DC (+ 20%)

10.8 V:
Fronius IG, Fronius IG Plus, Fronius IG Plus V,
Fronius IG Plus A, Fronius CL, Fronius CL USA,
Fronius IG 300–500

12.8 V:
Fronius Galvo, Fronius Symo

Digital inputs: 0–3, 4–9
Voltage level: low = min. 0 V – max. 1.8 V; high = min. 3 V – max. 24 V DC (+ 20%)
Input currents: dependent on input voltage; input resistance = 46 kOhm

No.	Function
	Digital outputs: 0–3 Switching capacity when supplied by the Fronius Datamanager 2.0 plug-in card: 3.2 W, 10.8/12.8 V in total for all four digital outputs 10.8 V: Fronius IG, Fronius IG Plus, Fronius IG Plus V, Fronius IG Plus A, Fronius CL, Fronius CL USA, Fronius IG 300–500 12.8 V: Fronius Galvo, Fronius Symo Switching capacity when supplied by an external power supply with min. 12.8 – max. 24 V DC (+ 20%), connected to Uint/Uext and GND: 1 A, 12.8–24 V DC (depending on the external power supply) per digital output The connection to the I/Os is made via the supplied mating connector.
(8)	**Antenna Plug** For screwing on the WLAN antenna or WLAN antenna extension cable, depending on the inverter
(9)	**Modbus Termination Switch (for Modbus RTU)** Internal bus termination with 120 ohm resistance (yes/no) Switch in “on” position: Termination resistance of 120 Ohm active Switch in “off” position: No termination resistance active **IMPORTANT!** The termination resistance must be active for the first and last device in an RS485 bus.
(10)	**Fronius Solar Net Master/Slave Switch** For switching between master and slave mode within a Fronius Solar Net ring **IMPORTANT!** All LEDs on the Fronius Datamanager 2.0 plug-in card are off in slave mode.
(11)	**Fronius Solar Net IN Connection Socket** Fronius Solar Net input colored red for connecting to other DATCOM components (e.g., inverters, sensor cards) For Fronius Datamanager 2.0 with Fronius Com Card function only! (for Fronius IG, Fronius IG Plus, Fronius IG Plus V, Fronius IG Plus A, Fronius CL, Fronius CL USA, Fronius IG 300–500 inverters)

No.	Function
(12)	**Fronius Solar Net OUT Connection socket** Fronius Solar Net output colored red for connecting other DATCOM components (e.g., inverters, sensor cards) For the Fronius Datamanager Box 2.0 only!
(13)	**External Power Supply Connection** For connecting an external power supply when the power supply within Fronius Solar Net is insufficient (e.g., when too many DATCOM components are installed in Fronius Solar Net). **IMPORTANT!** The external power supply unit for the Fronius Datamanager Box 2.0 must be securely disconnected from components supplying grid voltage (SELV or Class 2 for USA/Canada). The output power of the power supply unit may not exceed a max. of 15 VA/ 1.25 A. If the power supply is sufficient, the Supply LED (4) lights up green. For an external power supply, use only the Fronius power supply unit! For the Fronius Datamanager Box 2.0 only!

Schematic Connection of I/Os

Supply via the Fronius Datamanager 2.0 plug-in card:

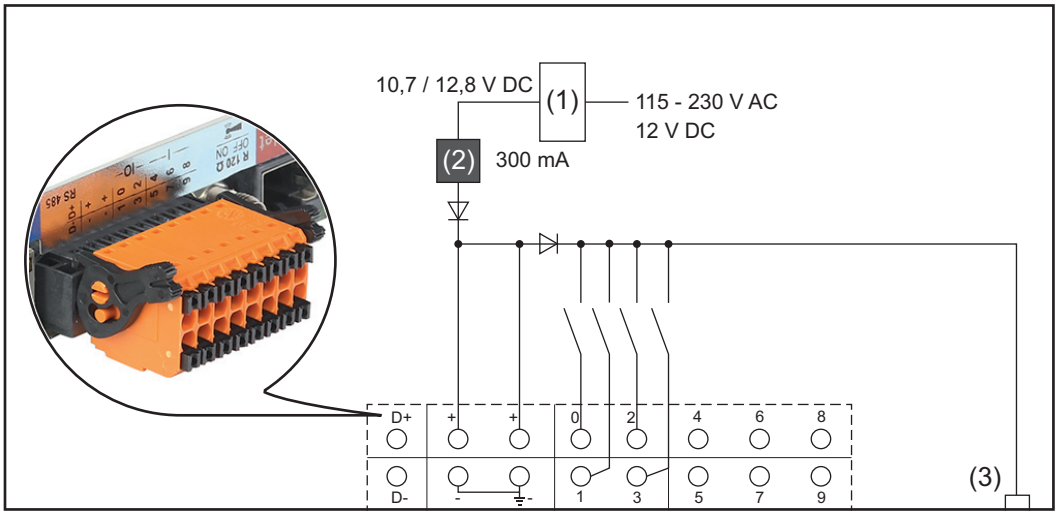

(1) Power supply
(for Fronius Datamanager 2.0 with Fronius Com Card function only)

(2) Current limit

(3) Solar Net IN connection socket

115–230 V AC:
Fronius IG, Fronius IG Plus, Fronius IG Plus V, Fronius IG Plus A, Fronius CL, Fronius CL USA, Fronius IG 300 - 500

12.8 V DC:
Fronius Galvo, Fronius Symo, Fronius Primo

Supply via external power supply:

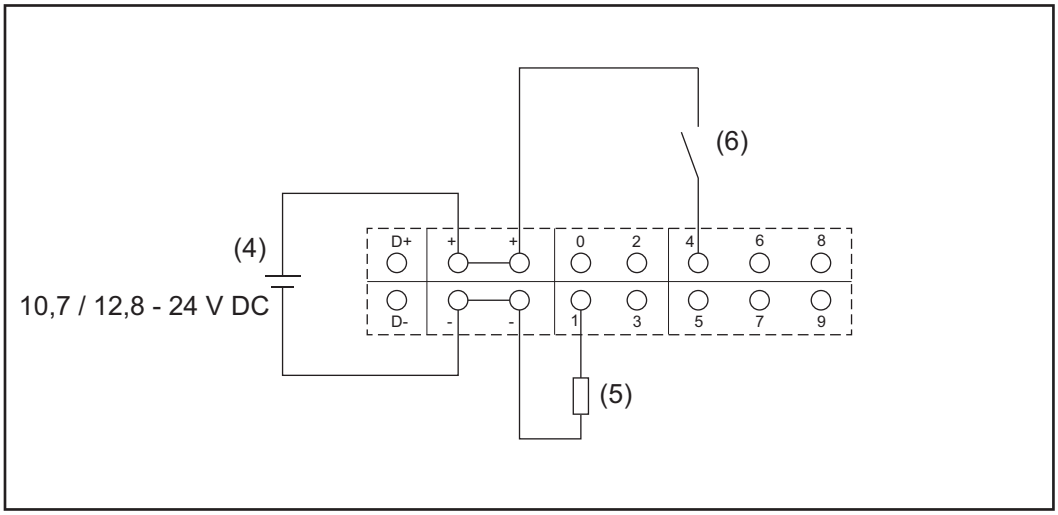

(4) External power supply
(5) Load
(6) Switch

When the supply is via an external power supply, the external power supply must be galvanically isolated.

10.7 V DC:
Fronius IG, Fronius IG Plus, Fronius IG Plus V, Fronius IG Plus A, Fronius CL, Fronius CL USA, Fronius IG 300 - 500

12.8 V DC:
Fronius Galvo, Fronius Symo, Fronius Primo

Technical data

Technical Data

Memory capacity	up to 4096 days
Supply voltage with Fronius Com Card function without Fronius Com Card function	 115–230 V AC 12 V DC
Energy consumption	< 2 W
Dimensions	
Plug-in card	132 x 103 x 22 mm 5.2 x 4.1 x 0.9 in.
Box	190 x 114 x 53 mm 4.69 x 4.49 x 2.09 in.
Degree of protection (box)	IP 20
External power supply connection (box)	12 V DC, max. 1 A, Class 2
Cable cross section for external power supply connection (box)	0.13–1.5 mm² AWG 16–24 (USA/Canada)
Ethernet (LAN)	RJ 45, 100 Mbit
WLAN	IEEE 802.11b/g/n client
RS 422 (Fronius Solar Net)	RJ 45
Ambient temperature	
Plug-in card	-20–+65°C -4–+149°F
Box	0–50°C 32–122°F
Fronius Solar Net power	approx. 3 W max. 3 DATCOM components *
I/O connection specifications	
Voltage level of digital inputs	low = min. 0 V–max. 1.8 V high = min. 3 V–max. 24 V (+ 20%)
Input currents of digital inputs	depending on the input voltage; input resistance = 46 kOhm
Switching capacity of digital outputs when supplied by the Datamanager plug-in card	3.2 W
Fronius IG, Fronius IG Plus, Fronius IG Plus V, Fronius IG Plus A, Fronius CL, Fronius CL USA, Fronius IG 300–500	10.8 V
Fronius Galvo, Fronius Symo, Fronius Primo	12.8 V in total for all four digital outputs (minus other Fronius Solar Net participants)

Switching capacity of digital outputs when supplied by an external power supply with min. 10.7–max. 24 V DC	1 A, 10.7–24 V DC (depending on the external power supply) per digital output
Max. switchable inductive loads on the digital outputs	76 mJ (per output)
Modbus RTU	RS-485 2-wire
Factory setting of RS-485 interface:	
Speed	9600 baud
Data frame	1 start bit 8 data bits no parity 1 stop bit

* Given sufficient power supply from Fronius Solar Net, the green LED lights up on every DATCOM component.
If the green LED does not light up, the power supply unit available from Fronius should be inserted into the 12 V power supply connection socket of an external DATCOM component.
Check the cable and plug connections if necessary.

Examples of external DATCOM components: Fronius String Control, Fronius Sensor Box etc.

Installing Fronius Datamanager 2.0

Inserting Fronius Datamanager 2.0 into an Inverter

General

Please see the Operating Instructions for the respective inverter for information regarding plug-in card installation. Please note the safety and warning information in your inverter's Operating Instructions.

Safety

WARNING!

Danger from grid voltage and DC voltage from solar modules.
An electric shock can be fatal.
- ► The connection area should only be opened by an authorized electrician.
- ► The separate power stage set area should only be disconnected from the connection area after first being disconnected from the grid power.
- ► The separate power stage set area should only be opened by Fronius-trained service personnel.
- ► Before making any connections, make sure that the AC and DC sides in front of the inverter are not charged, e.g.:
- ► Switch off the AC automatic circuit breaker for the inverter
- ► Cover solar modules
- ► Please observe the 5 safety rules.

WARNING!

Danger of residual voltage from capacitors.
An electric shock can be fatal.
- ► Wait until the capacitors have discharged.

Follow general ESD guidelines when handling plug-in cards.

Fronius Datamanager 2.0 Plug-in Positions

The Fronius Datamanager 2.0 plug-in position is specified for each inverter type:

Inverter	Plug-in position
Fronius IG 15 - 60	ENS slot *)
Fronius IG 300 - 500	ENS slot *)
Fronius IG Plus, Fronius IG Plus V	on the far right, unless a ML-MON plug-in card is present
Fronius CL	on the far right, unless a ML-MON plug-in card is present
Fronius Galvo	does not matter
Fronius Symo	does not matter
Fronius Primo	does not matter

*) If an ENS plug-in card is inserted in the ENS slot: Insert Fronius Datamanager 2.0 in the next slot to the right of the ENS slot.

IMPORTANT!
The next slot must be kept free.
Never remove an existing ENS plug-in card.

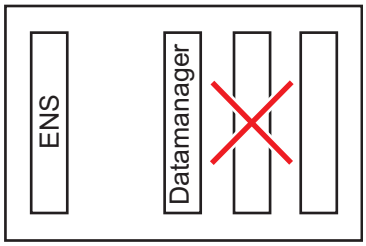

Installing and connecting WLAN antennas

General

Depending on the inverter the WLAN antenna must be either installed in the inverter or mounted to the outside of the inverter.

IMPORTANT! Always follow the relevant operating instructions when opening an inverter! Observe the safety rules!

Fronius IG, Fronius IG Plus, Fronius IG Plus V, Fronius CL: Installing and Connecting Antennas

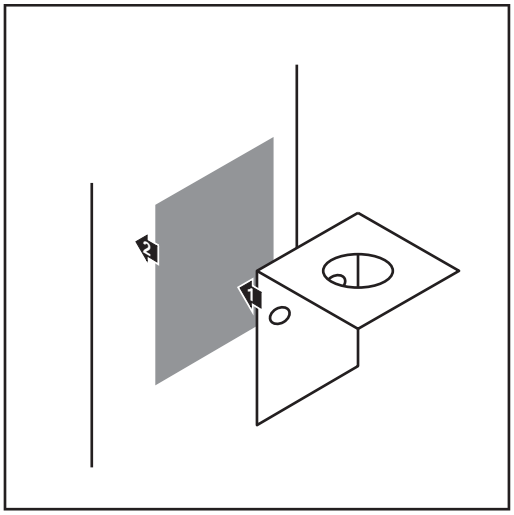

1 Use the double-sided adhesive tape to fasten the mounting bracket to the outside of the inverter housing or, if suitable for the antenna cable, secure it in a position near the inverter

IMPORTANT! The double-sided adhesive tape only reaches its maximum bond strength after 24 hours.

IMPORTANT! The mounting bracket may not be screwed to the inverter housing.
It may however be fitted in a nearby position. The relevant screws are not included in the scope of delivery and must be selected by the installer.

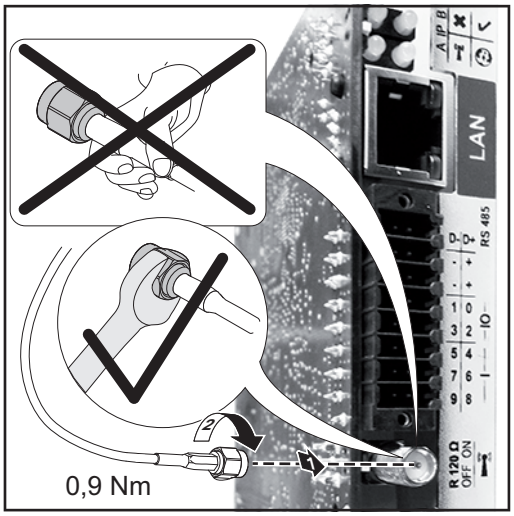

2 Connect the antenna cable to the antenna socket on the Fronius Datamanager 2.0 plug-in card

3 Run the antenna cable out through the DATCOM opening on the inverter

4 If possible, secure the cable with a strain relief device

5 Close or seal the DATCOM opening in accordance with the inverter operating instructions

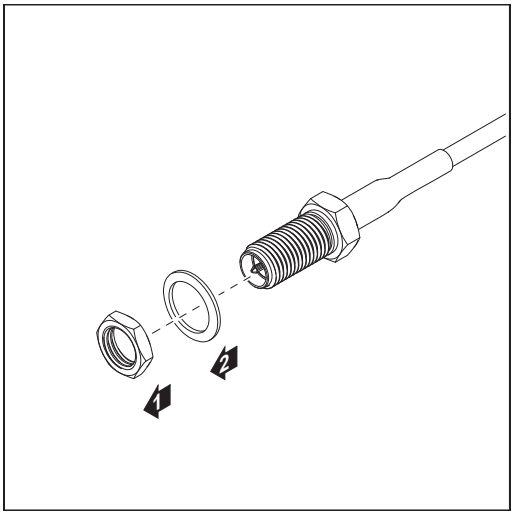

6 Remove the hex nut and washer from the outside thread of the antenna cable

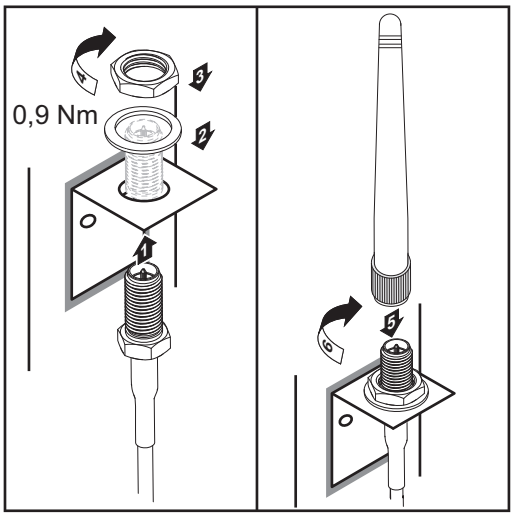

7 Run the antenna cable through the drill hole on the mounting bracket

8 Attach the lock washer and screw on the hex nut

9 Screw on the antenna

Fronius IG USA, Fronius IG Plus USA, Fronius IG Plus V USA: Installing and Connecting Antennas

1

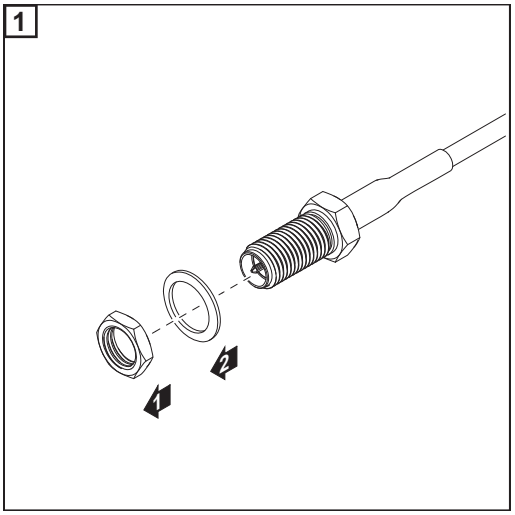

2

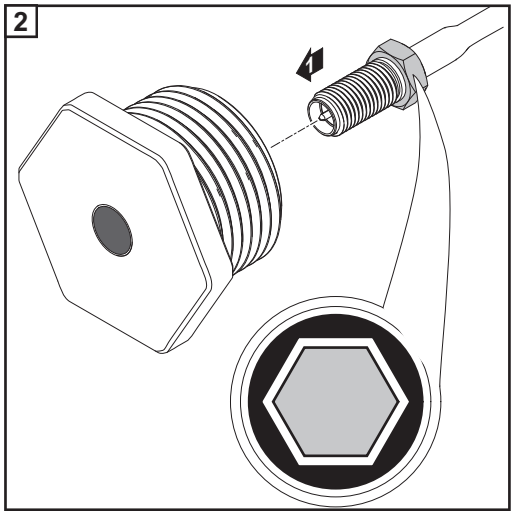

⚠ CAUTION!

Danger of short circuit caused by loose metal parts from knockouts.
Loose metal parts in the inverter may cause short circuits when the inverter is powered up.
When removing knockouts, make sure that
- ► no loose metal parts fall into the inverter,
- ► any metal pieces that do fall into the inverter are removed immediately.

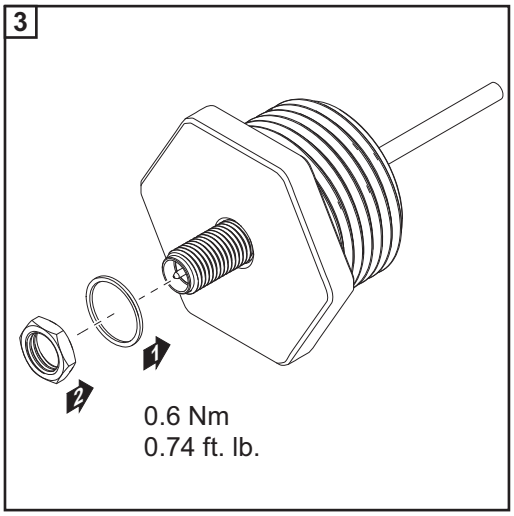

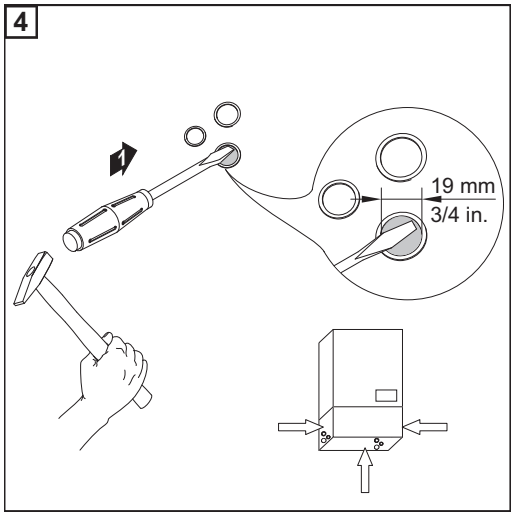

NOTE!

In order to ensure leak-tightness, the sealing ring must be fitted to the antenna screw joint before inserting the antenna screw joint into the inverter housing.

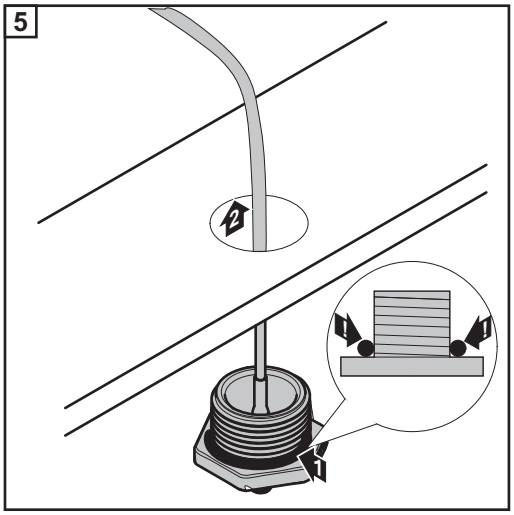

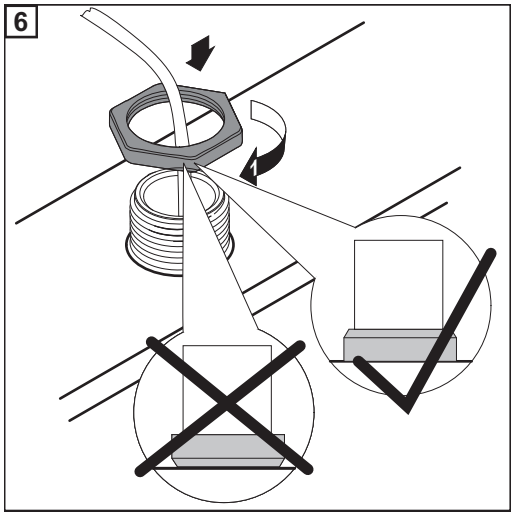

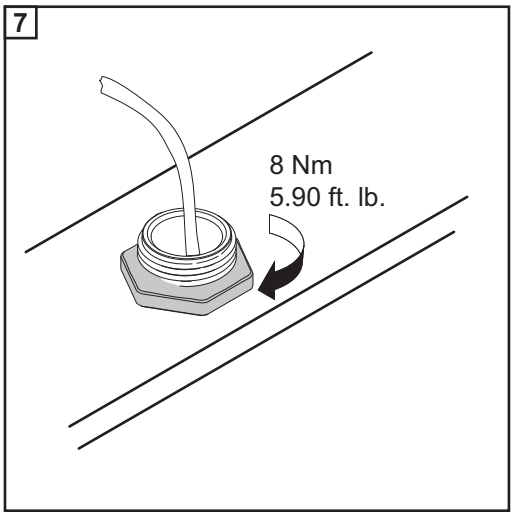

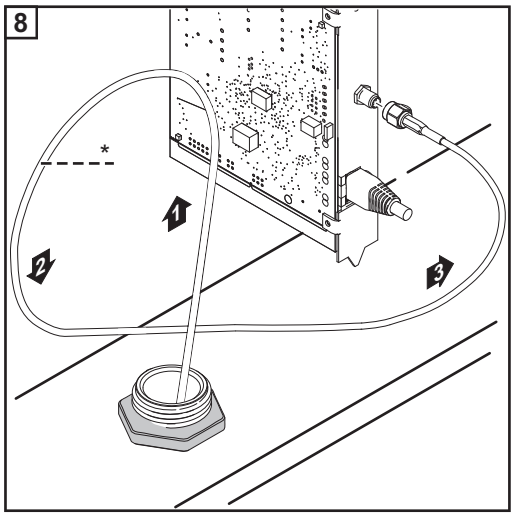

**Bending radius of the antenna cable: at least 25.4 mm/1 in.*

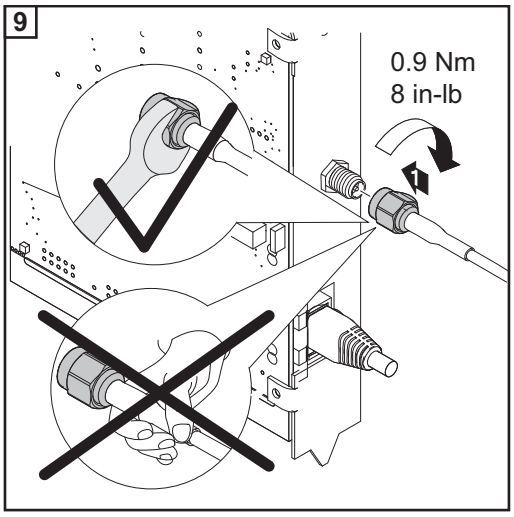

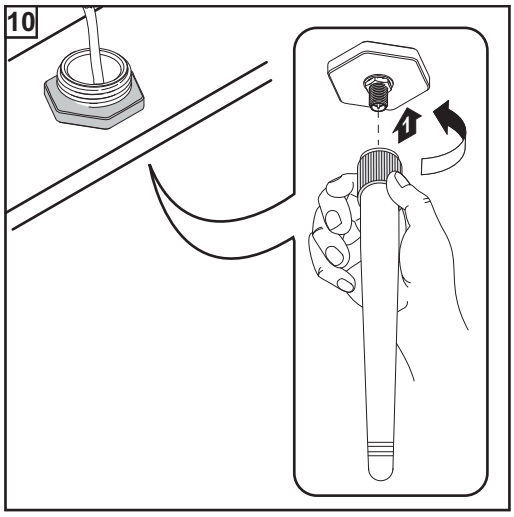

Installing Fronius Datamanager 2.0 in Fronius Solar Net

Safety

CAUTION!

DATCOM components and/or the PC/laptop may be seriously damaged if the Ethernet or Fronius Solar Net cables are connected incorrectly to the Fronius Datamanager 2.0

- ► The Ethernet cable should only be inserted into the LAN connection socket (colored blue).
- ► The Fronius Solar Net cable should only be inserted into the Fronius Solar Net IN connection socket (colored red).

Installing Inverters with Fronius Datamanager 2.0 in Fronius Solar Net

Fronius IG, Fronius IG Plus, Fronius IG Plus V, Fronius IG Plus A, Fronius CL, Fronius CL USA, Fronius IG 300–500:

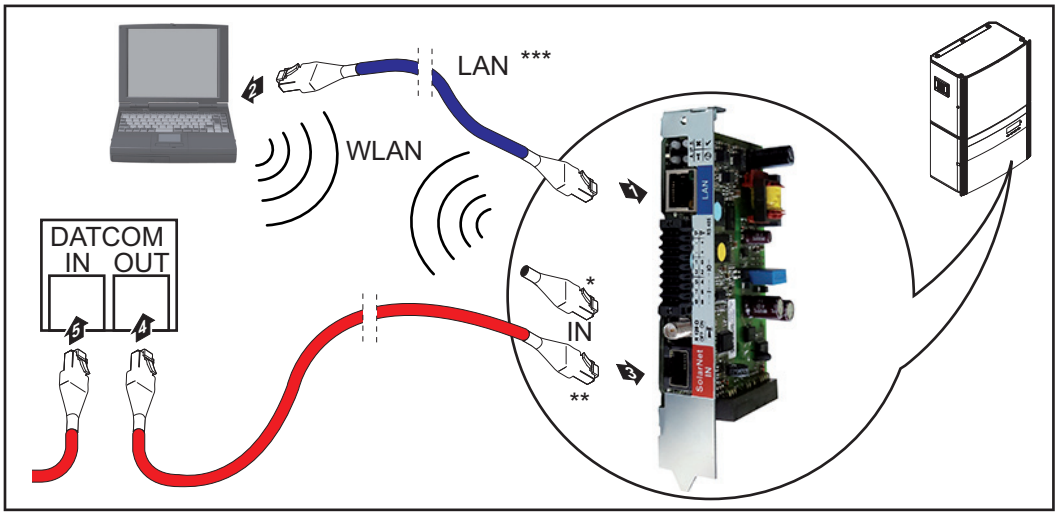

Fronius Galvo, Fronius Symo, Fronius Primo:

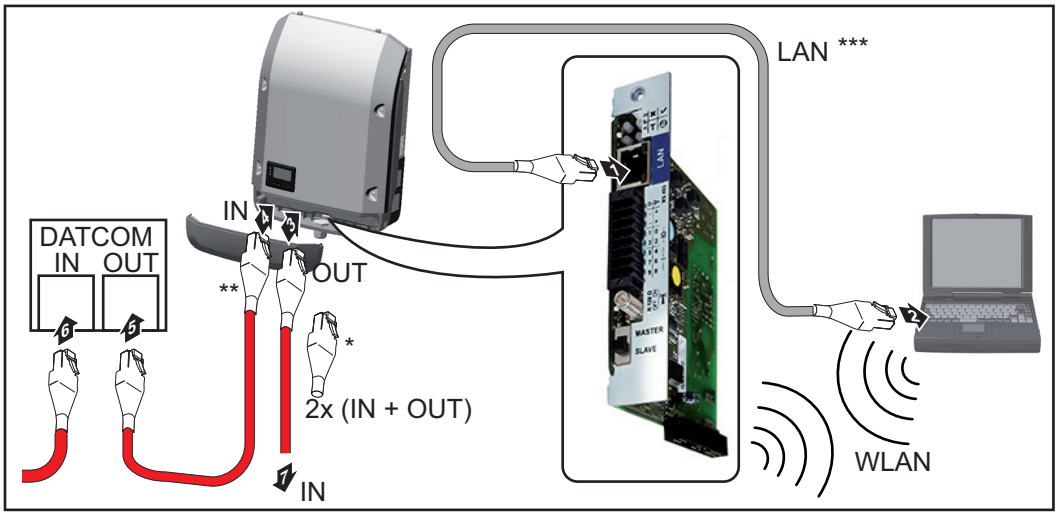

* Fronius Solar Net termination plug, if only one inverter with Fronius Datamanager 2.0 is linked to a PC

** Fronius Solar Net cable, if an inverter with Fronius Datamanager 2.0 is linked to a PC and other DATCOM components

*** Ethernet cable is not included in the scope of supply for the Fronius Datamanager 2.0/Fronius Datamanager Box 2.0

Connection between Fronius Datamanager 2.0 and PC via LAN or WLAN

1 Insert and lay the Ethernet cable in the inverter like a data communication cable in accordance with the operating instructions for the inverter

2 Insert the Ethernet cable into the LAN connection socket

3 Insert the Ethernet cable into the PC/laptop or into a suitable network connection socket

4 If only one inverter with Fronius Datamanager 2.0 is linked to a PC:

Fronius IG, Fronius IG Plus, Fronius IG Plus V, Fronius IG Plus A, Fronius CL, Fronius CL USA, Fronius IG 300 - 500:
Insert the Fronius Solar Net termination plug into the Fronius Solar Net IN connection socket

Fronius Galvo, Fronius Symo, Fronius Primo:
Insert a Fronius Solar Net termination plug into the Solar Net IN connection socket and the Solar Net OUT connection socket

If other DATCOM components are connected to the network, besides the inverter with Fronius Datamanager 2.0:
Insert the Fronius Solar Net cable into the Fronius Solar Net IN connection socket of the Fronius Datamanager 2.0

5 Connect the other DATCOM components

IMPORTANT! A Fronius Solar Net termination plug must be inserted into the empty IN connection socket of the last DATCOM component.

Installing Fronius Datamanager Box 2.0 in Fronius Solar Net

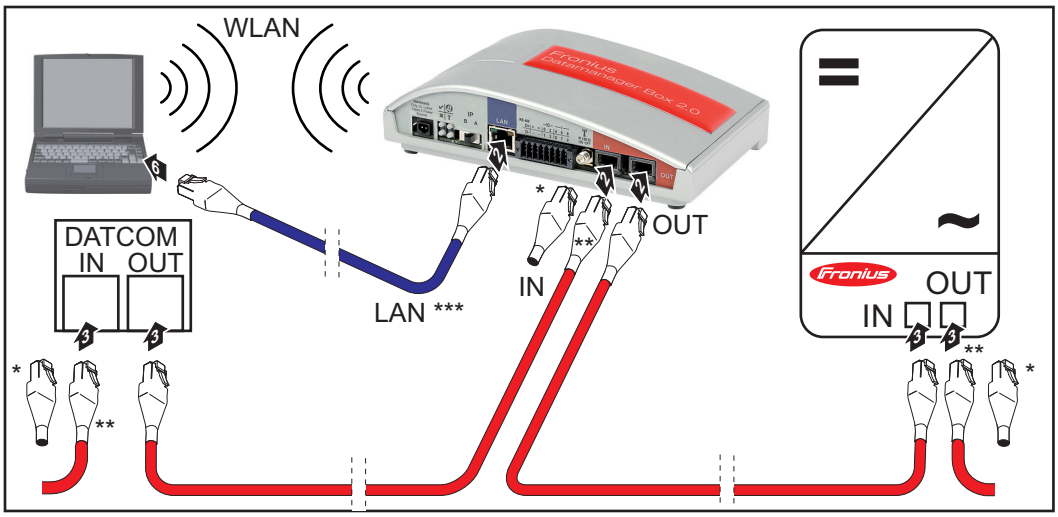

* Fronius Solar Net termination plug for the last DATCOM component

** Fronius Solar Net cable, if a Fronius Datamanager Box 2.0 is linked to a PC and other DATCOM components

*** Ethernet cable is not included in the scope of supply for the Fronius Datamanager 2.0/Fronius Datamanager Box 2.0

Connection between Fronius Datamanager 2.0 and PC via LAN or WLAN

1. Insert the Ethernet cable into the LAN connection socket
2. Insert the Ethernet cable into the PC/laptop or into a suitable network connection socket
3. Insert the Fronius Solar Net cable into the Fronius Solar Net OUT connection socket of the Fronius Datamanager Box 2.0
4. Insert the Fronius Solar Net cable into the Fronius Solar Net IN connection socket of the inverter as per the inverter operating instructions
5. Connect the other DATCOM components

IMPORTANT! A Fronius Solar Net termination plug must be inserted into each empty IN or OUT connection socket of the last DATCOM components.

Fronius Solar Net Cabling

Fronius Solar Net clients

Inverters with Fronius Datamanager, Fronius Com Card, DATCOM components with external housing, or other DATCOM components will hereinafter be referred to as Fronius Solar Net clients.

Fronius Solar Net Client Cabling

The data connection for the Fronius Solar Net client is a 1:1 connection using 8-pin data cables and RJ-45 plugs.
The overall line length in a Fronius Solar Net ring must not exceed 1000 m.

Requirements for the Solar Net Data Cables

Shielded CAT5 (new) and CAT5e (old) cables compliant with ISO 11801 and EN 50173 must be used for the Fronius Solar Net client cabling. Other cables are not permitted.

IMPORTANT! Do not use ISO/IEC-11801 U/UTP cables!

Permitted cables:

- S/STP
- F/STP
- S/FTP
- F/FTP
- SF/FTP
- S/UTP
- F/UTP
- U/FTP
- U/STP

The shield must be crimped onto a CAT5-compatible shielded plug.

Due to the fact that the wires in Ethernet cables are twisted, you must make sure the twisted pairs of wires are assigned correctly for cabling in accordance with TIA/EIA-568B:

Fronius Solar Net contact		Pair no.	Color	
1	+12 V	3		white/orange line
2	GND	3		orange/white line or orange
3	TX+ IN, RX+ OUT	2		white/green line
4	RX+ IN, TX+ OUT	1		blue/white line or blue
5	RX- IN, TX- OUT	1		white/blue line
6	TX- IN, RX- OUT	2		green/white line or green
7	GND	4		white/brown line
8	+12 V	4		brown/white line or brown

Cabling compliant with TIA/EIA-568B

- Make sure that the wires are assigned correctly.
- When setting up an independent ground connection (e.g., in patch panels), make sure that the shield is grounded on one side of the cable only.

The following structured cabling standards must generally be observed:
- EN 50173-1 for Europe
- ISO/IEC 11801:2002 internationally
- TIA/EIA 568 for North America

Rules for use of copper cables apply.

Preassembled data cables

The following preassembled data cables are available from Fronius:
- CAT5 cable 1 m ... 43,0004,2435
- CAT5 cable 20 m ... 43,0004,2434
- CAT5 cable 60 m ... 43,0004,2436

The cables listed above are 8-pin, 1:1 LAN network cables, shielded and twisted, including RJ 45 plugs.

IMPORTANT! Data cables are not UV resistant. They should be protected from sunlight when laid outdoors.

Installing Fronius Datamanager 2.0 – Overview

Safety

WARNING!

Danger due to incorrect operation.
This can result in severe personal injury and damage to property.
- ► Do not use the functions described here until you have fully read and understood the Operating Instructions.
- ► Do not use the functions described here until you have fully read and understood all of the Operating Instructions of the system components, especially the safety rules.

Installing Fronius Datamanager 2.0 requires knowledge of network technology.

Starting for the first time via the Fronius Solar.web App

The Fronius Solar.web App makes starting Fronius Datamanager 2.0 for the first time significantly easier. The Fronius Solar.web App is available from the relevant app store.

GET IT ON Google play Download on the App Store

To start Fronius Datamanager 2.0 for the first time,
- the Fronius Datamanager 2.0 plug-in card must be installed in the inverter,
  or
- there must be a Fronius Datamanager Box 2.0 in the Fronius Solar Net ring.

IMPORTANT! To establish a connection to Fronius Datamanager 2.0, the end device in question (e.g., laptop, tablet) must be configured as follows:
- "Obtain an IP address automatically (DHCP)" must be activated

1 Connect the inverters with Fronius Datamanager 2.0 or Fronius Datamanager Box 2.0 in Fronius Solar Net

IMPORTANT! Inverters Fronius IG, Fronius IG Plus, Fronius IG Plus V, Fronius IG Plus A, Fronius CL, Fronius CL USA, and Fronius IG 300–500 must always be located at the beginning or end of the Fronius Solar Net ring.

2 For Fronius Galvo/Fronius Symo/Fronius Primo only and when linking multiple inverters in Fronius Solar Net:
Set the Fronius Solar Net master/slave switch on the Fronius Datamanager 2.0 plug-in card as required
- One inverter with Fronius Datamanager 2.0 = master
- All other inverters with Fronius Datamanager 2.0 = slave (the LEDs on the Fronius Datamanager 2.0 plug-in cards are off)

3 Switch the device to service mode

Inverter with Fronius Datamanager 2.0 plug-in card:
- Switch the IP switch on the Fronius Datamanager 2.0 plug-in card to position A

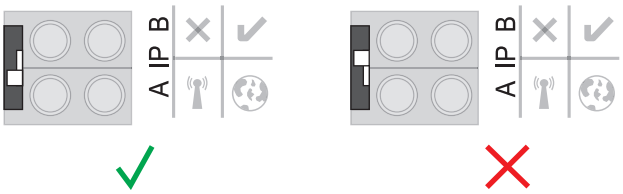

or

- Activate the WLAN Access Point via the Setup menu of the inverter (the performance of this function depends on the inverter software)

Fronius Datamanager Box 2.0:
- Switch the IP switch on the Fronius Datamanager Box 2.0 to position A

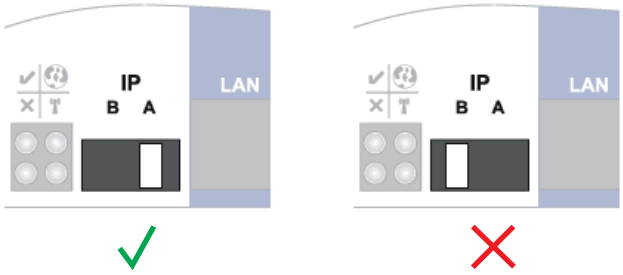

The inverter/Fronius Datamanager Box 2.0 establishes the WLAN Access Point. The WLAN Access Point stays open for one hour.

4 Download Fronius Solar.web App

5 Run Fronius Solar.web App

The start page of the Setup wizard appears.

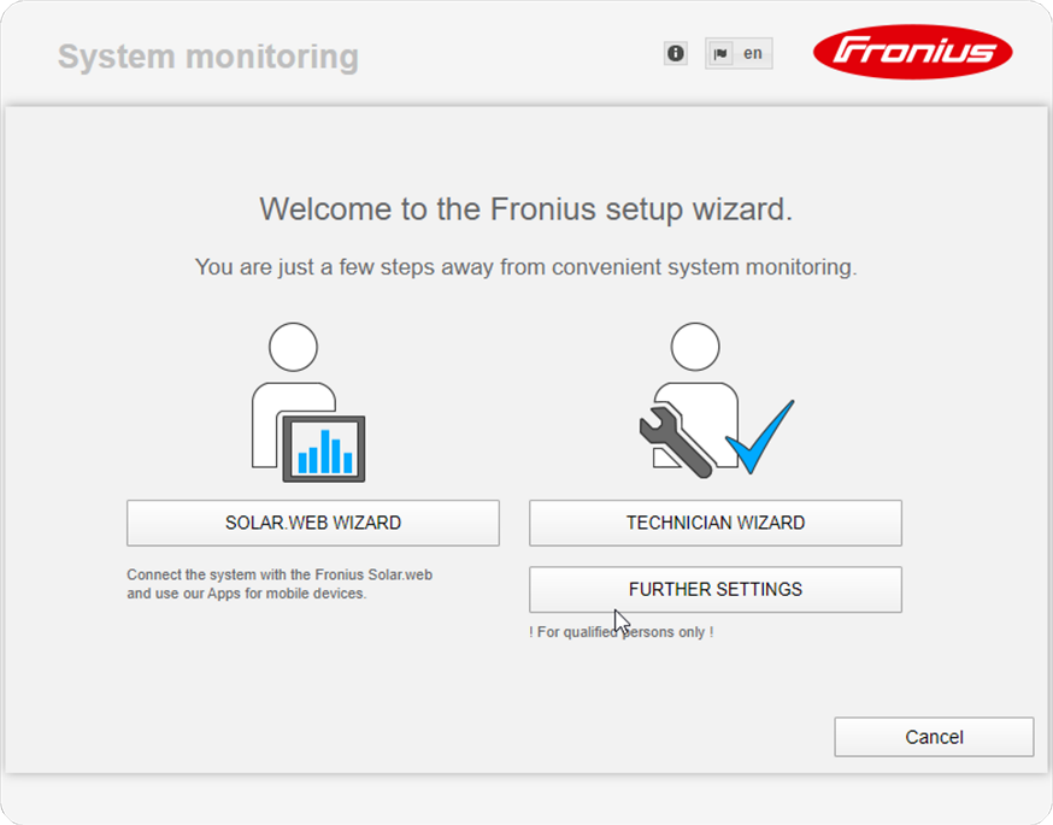

The Technician Wizard is designed for the installer and includes standard-specific settings.
Running the Technician Wizard is optional.
If the Technician Wizard is run, it is essential to note down the assigned service password.
This service password is required to configure the DSO Editor and Meter menu items.
If the Technician Wizard is not run, no specifications for power reduction are set.

The Solar Web Wizard must be run.

6 If necessary, run the Technician Wizard and follow the instructions

7 Run the Solar Web Wizard and follow the instructions

The Fronius Solar.web start page appears.
or
The Fronius Datamanager 2.0 website opens.

Starting for the first time via a web browser

The Fronius Solar.web App makes starting Fronius Datamanager 2.0 for the first time significantly easier. The Fronius Solar.web App is available from the relevant app store.

GET IT ON Google play Download on the App Store

To start Fronius Datamanager 2.0 for the first time,
- the Fronius Datamanager 2.0 plug-in card must be installed in the inverter,
  or
- there must be a Fronius Datamanager Box 2.0 in the Fronius Solar Net ring.

IMPORTANT! To establish a connection to Fronius Datamanager 2.0, the end device in question (e.g., laptop, tablet) must be configured as follows:
- "Obtain an IP address automatically (DHCP)" must be activated

WARNING!

Danger from grid voltage and DC voltage from solar modules.
An electric shock can be fatal.
- ► Before opening the inverter, wait until the capacitors have discharged.
- ► Follow the Operating Instructions when opening the inverter.
- ► Observe the safety rules and safety instructions contained in the inverter's Operating Instructions.

---

1 Connect the inverters with Fronius Datamanager 2.0 or Fronius Datamanager Box 2.0 in Fronius Solar Net

IMPORTANT! Inverters Fronius IG, Fronius IG Plus, Fronius IG Plus V, Fronius IG Plus A, Fronius CL, Fronius CL USA, and Fronius IG 300–500 must always be located at the beginning or end of the Fronius Solar Net ring.

2 For Fronius Galvo/Fronius Symo/Fronius Primo only and when linking multiple inverters in Fronius Solar Net:
Set the Fronius Solar Net master/slave switch on the Fronius Datamanager 2.0 plug-in card as required
- One inverter with Fronius Datamanager 2.0 = master
- All other inverters with Fronius Datamanager 2.0 = slave (the LEDs on the Fronius Datamanager 2.0 plug-in cards are off)

3 Switch the device to service mode

Inverter with Fronius Datamanager 2.0 plug-in card:
- Switch the IP switch on the Fronius Datamanager 2.0 plug-in card to position A

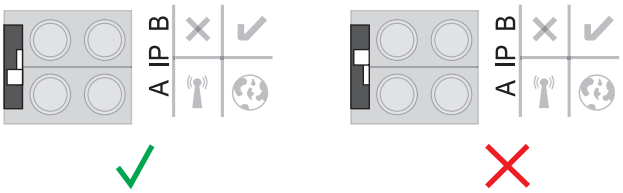

or
- Activate the WLAN Access Point via the Setup menu of the inverter (the performance of this function depends on the inverter software)

Fronius Datamanager Box 2.0:
- Switch the IP switch on the Fronius Datamanager Box 2.0 to position A

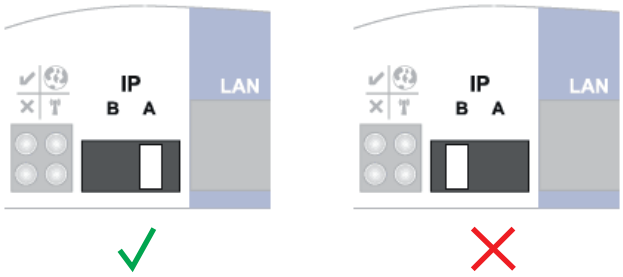

The inverter/Fronius Datamanager Box 2.0 establishes the WLAN Access Point. The WLAN Access Point stays open for one hour.

4 Connect the end device to the WLAN Access Point

SSID = FRONIUS_240.xxxxx (5–8 digits)

- Search for a network with the name "FRONIUS_240.xxxxx"
- Establish a connection to this network
- Enter password 12345678

(or connect end device and inverter via Ethernet cable)

5 Enter in the browser:
http://datamanager
or
192.168.250.181 (IP address for WLAN connection)
or
169.254.0.180 (IP address for LAN connection)

The start page of the Setup wizard appears.

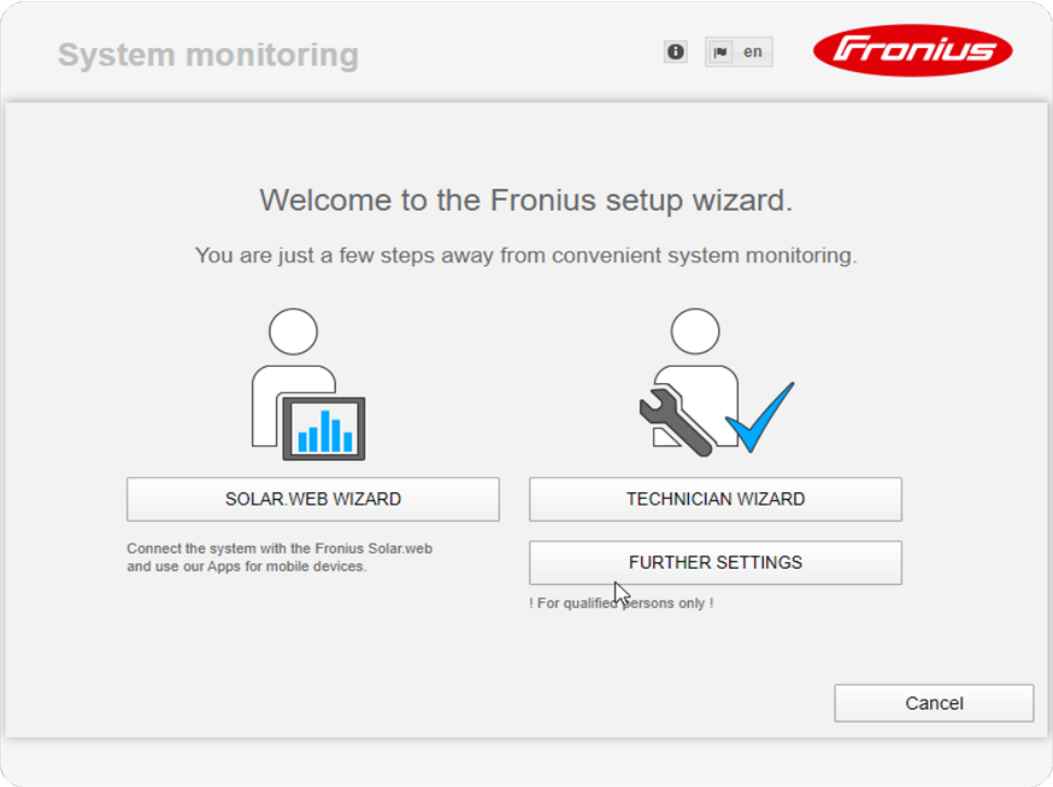

The Technician Wizard is designed for the installer and includes standard-specific settings.
If the Technician Wizard is run, it is essential to note down the assigned service password.
This service password is required to configure the DSO Editor and Meter menu items.
If the Technician Wizard is not run, no specifications for power reduction are set.

The Solar Web Wizard must be run.

6 If necessary, run the Technician Wizard and follow the instructions

7 Run the Solar Web Wizard and follow the instructions

The Fronius Solar.web start page appears.
or
The Fronius Datamanager 2.0 website opens.

Establishing a Connection to Fronius Datamanager 2.0

Connecting to Fronius Datamanager 2.0 via a Web Browser

General

The connection to Fronius Datamanager 2.0 via a web browser is suitable for accessing current values with several PC users in a LAN (e.g., company networks, schools).

For example, total and daily yields can be accessed and/or inverter comparisons can be made on the Fronius Datamanager 2.0 website.

Requirements

- At least a LAN or WLAN connection
- Web browser (e.g., Microsoft Internet Explorer IE ≥ 9.0, Firefox 4, Google Chrome 27.0)
- PC/laptop in the same network segment as Fronius Datamanager 2.0

Establishing a Connection to Fronius Datamanager 2.0 via a Web Browser

1. Open the web browser
2. Enter the IP address or the host name and the domain name for Fronius Datamanager 2.0 in the address field

   The Fronius Datamanager 2.0 website opens.

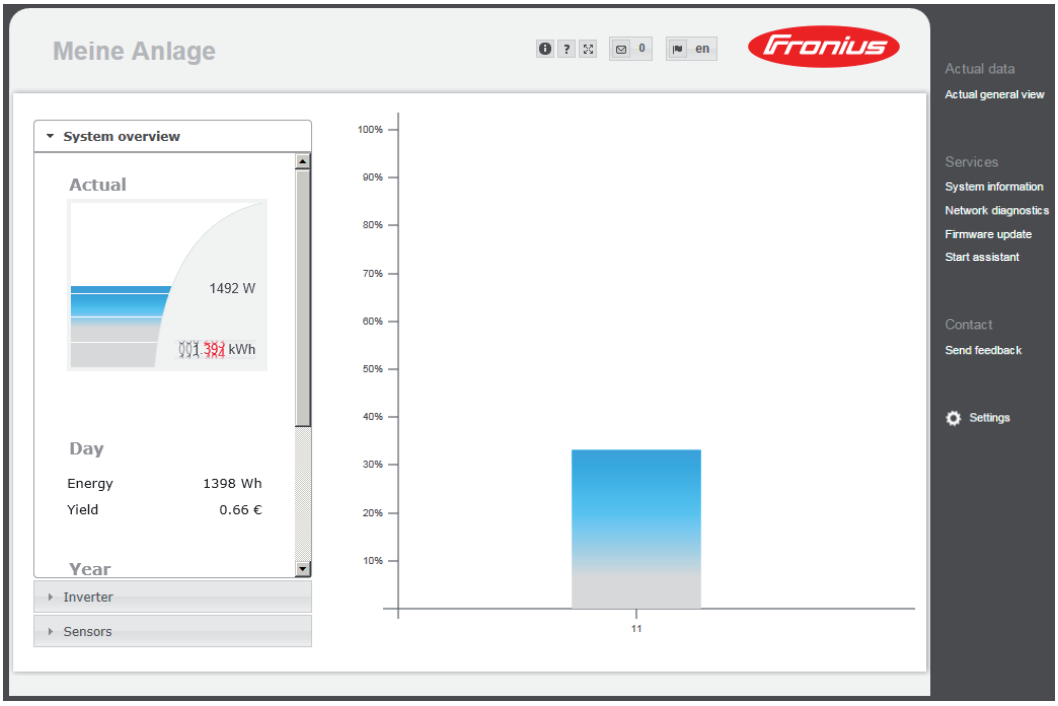

Connecting to Fronius Datamanager 2.0 via the Internet and Fronius Solar.web

General

By connecting to Fronius Datamanager 2.0 via the internet and Fronius Solar.web, you can access archived data and up-to-date photovoltaic system data online from anywhere in the world with internet access.
You can also provide other users with guest access so that they can view your photovoltaic system, or you can make a comparison of several systems.

Function Overview

Fronius Datamanager 2.0 is connected to the internet (e.g., via a DSL router). Fronius Datamanager 2.0 regularly logs on to Fronius Solar.web and sends its saved data every day.
Fronius Solar.web can actively contact Fronius Datamanager 2.0, e.g., to display real-time data.

Requirements

- Internet access
- Web browser

  IMPORTANT! Fronius Datamanager 2.0 cannot connect itself to the internet. A router must be used for a DSL connection to the internet.

- Registration of photovoltaic system with Fronius Solar.web.

- In order to access real-time data in Fronius Solar.web, the "Yes" selection option must be activated under "Send actual data to Fronius Solar.web" in Fronius Datamanager 2.0 in the settings under Solar.web.

- In order to access archived data in Fronius Solar.web, the "Daily at" or "Hourly" selection option must be activated under "Send archive data to Fronius Solar.web" in Fronius Datamanager 2.0.

Accessing Data from Fronius Datamanager 2.0 via the Internet and Fronius Solar.web

To access real-time and archived data from Fronius Datamanager 2.0 using Fronius Solar.web:

1. Start Fronius Solar.web: http://www.solarweb.com

   For more information about Fronius Solar.web, see the online help.

Current Data, Services, and Settings on Fronius Datamanager 2.0

The Fronius Datamanager 2.0 Website

Fronius Datamanager 2.0 Website – Overview

The following data is displayed on the Fronius Datamanager 2.0 website:

(1) Current comparison view of all inverters in the Fronius Solar Net ring

(2) System overview: Current/Day/Year/Total

(3) Inverter

(4) Sensors

(5) Services
System information, Network diagnostics, Firmware update

(6) Contact
Send feedback

(7) Settings menu

(8) Other setting options

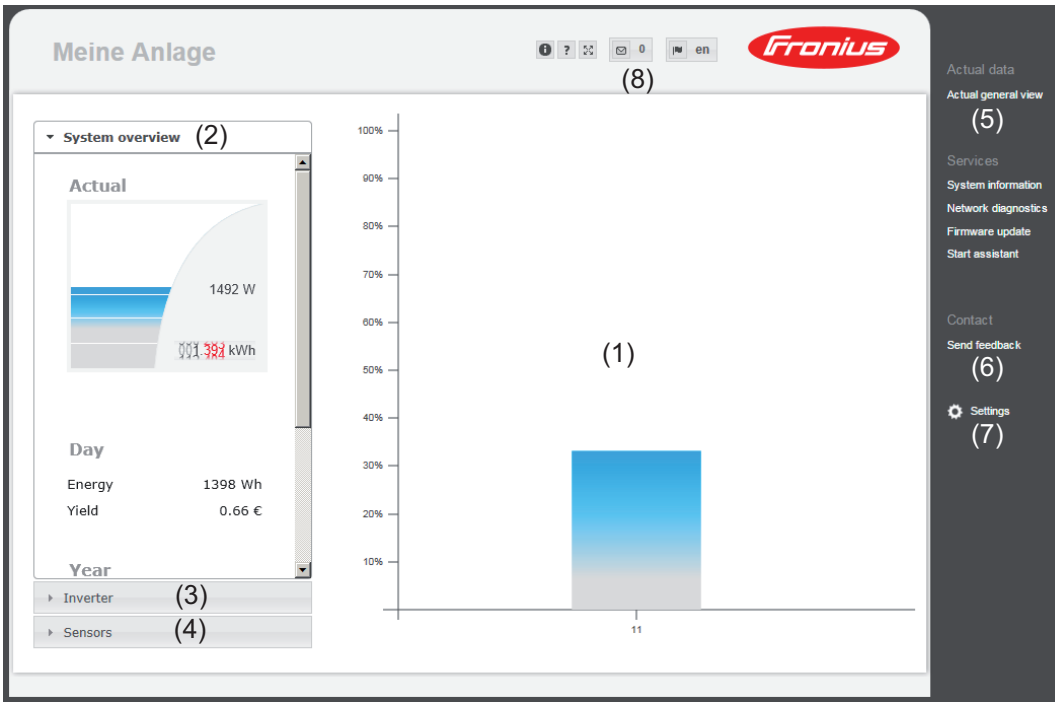

Login

The setting options on the website of the Fronius Datamanager 2.0 depend on the user's authorization (see section **Passwords** on page **67**).

Log in with username and password:

1. Select the user to log in.
2. Enter the password for the selected user.
3. Click the "Login" button.

The user is logged in.

Reset password

The "Forgot your password?" function in the login window can be used to reset the password for the selected user.

Request unlock key and save new password:

1. Select the user for which you want to reset the password.
2. Note the "Challenge" (six-digit number) and Datalogger ID (can be found under the symbol, see section **Other setting options** on page **58**).
3. Contact Fronius Technical Support and provide the "Challenge" and the Datalogger ID.
4. Enter the unlock key received from Fronius Technical Support in the "Key" input field.
5. Enter a new password in the "Password" and "Repeat password" input fields.
6. Click the “Save” button.

The new password is saved.

The Settings menu

After clicking on "Settings," the Settings menu is opened on the Fronius Datamanager 2.0 website.
Fronius Datamanager 2.0 is configured in the Settings menu.

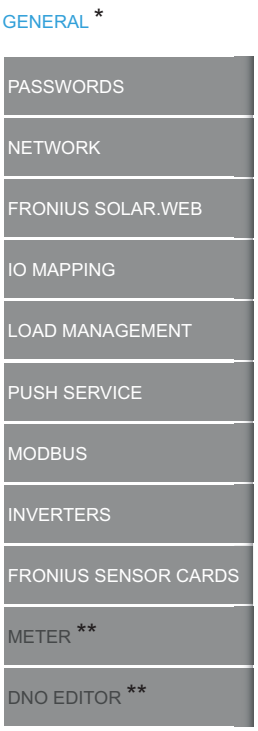

Menu items in Settings menu

General adjustment and viewing of menu items

1. Establish a connection to Fronius Datamanager 2.0
2. Click on "Settings"
3. Log in with the username (admin or service) (see section **Login** on page **57**)
4. Click on the desired menu item

   The desired menu item is opened.

5. View menu item or edit accordingly.
6. If present, click on the relevant button (e.g., Save, Synchronize)

   The amended data are applied.

* Selected menu item

** The Meter and DSO Editor menu items are protected by the service password.

Other setting options

Other setting options are shown in the top right corner of the Fronius Datamanager 2.0 website:

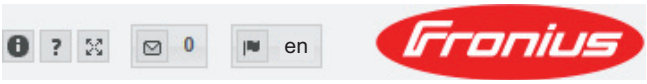

	System information: Datalogger ID, software version, firmware update search, Solar Net connection, Solar.web connection
	Help: - Software Operating Instructions - Fronius Solar Channel
	Expand contents: The Real-time Data/Settings menu is hidden
0	Display notifications
de	Language: Set the language The Fronius Datamanager 2.0 website will appear in the language set for the browser itself or in the last selected language.

Current Data in Fronius Datamanager 2.0

Current Comparison View

Several inverters in the same photovoltaic system can be compared in the current Comparison View.

The real-time inverter AC power is displayed as a percentage of the power from the solar module connected to the respective inverter (shown in a bar diagram). A bar is displayed for each inverter. The bar color indicates the power range of the inverter:

Blue:	The inverter power corresponds to the average power of all inverters.
Yellow:	The inverter power deviates slightly from the average power of all inverters (50–90% from the average).
Red:	The inverter power deviates significantly from the average power of all inverters or an error has occurred in the inverter (< 50% from the average).

System Overview

The system overview contains:
- the real-time power data of a photovoltaic system
- the active devices
- the energy generated per day, per year, and in total
- the yield per day, per year, and in total

The values for consumption and energy fed into the grid are only displayed when a meter is configured on the inverter and the meter sends valid data.

Inverter/Sensor View

Inverter View
The Inverter View displays all the inverters present in the system.
Clicking on an inverter or the corresponding bar in the Comparison View displays the inverter's real-time data.

Sensor View
The Sensor View displays all the sensor cards/boxes present in the system.

Services – System Information

System Information

The System Information page contains various information about the system.

The following buttons are also available:

- "**Datalogger restart**" button
  Used to restart the datamanager/system monitoring
- "**Reset to factory settings**" button with the following selection options:
  - "**All settings except for the network**"
    Used to reset the Datamanager (system monitoring) to factory settings.
    The network settings and all items protected by the service user (UC Editor, meter settings, and the service password) are retained
  - "**All settings**"
    Used to reset the Datamanager (system monitoring) and the network settings to factory settings.
    All items protected by the service user (UC Editor, meter settings, and the service password) are retained

IMPORTANT! When the Datamanager (system monitoring) is reset to factory settings, the time and date settings must be checked.

Services – Network Diagnostics

Network Diagnostics

The Services / Network diagnostics option contains functions that are useful for diagnosing and correcting network problems. Ping and traceroute commands can be executed.

Ping command
Used to determine whether or not a host is available and how much time a data transfer will take.

Send ping command:

1. Enter a host name or IP address in the Host field
2. Click on the ping button
   - Ping command is sent
   - The resulting data is displayed

Traceroute command
Used to determine via which intermediate stations the data reaches the host.

Send traceroute command:

1. Enter a host name or IP address in the Host field
2. Click on the "traceroute" button
   - Traceroute command is sent
   - The resulting data is displayed

Services – Firmware Update

General

You can update the Datamanager firmware under Services/Firmware Update. A firmware update can be performed via LAN or web.

Automatic Update Search

IMPORTANT! An internet connection is required for the automatic update search.

When the “**Automatic update search**” option is activated, the Datamanager will automatically search for updates once a day. If new updates are available, a message is displayed under the other setting options for the website.

Manual Update Search

When the "**Automatic update search**" option is deactivated, there will be no automatic search for updates.

1 To search manually for updates, use the "**Check now**" button

Firmware Update via Web

1 Open the Datamanager website via a web browser
2 Open “Firmware update” under “Services”
3 Select “**Update via Web**”
4 Click on the “**Run update**” button
The confirmation prompt for the update appears
5 Click on the “**Yes**” button
The update starts and the progress is displayed as a bar and a percentage.
6 Once the update has been carried out successfully, click on the “**Apply/Save**” ✓ button

If the connection to the server fails:
- Deactivate the firewall for the duration of the update
- Retry the update

IMPORTANT!

If a proxy server is used to connect to the internet:

► The “Use proxy server for Web update” option must be activated
► The required data must be entered

Firmware Update via LAN

1 Establish LAN connection between PC/laptop and Datamanager
2 Download the current firmware from the Fronius homepage
3 Run the downloaded update file on the PC/laptop
This will start a web server from which the Datamanager will download the required files.
4 Open the Datamanager website via a web browser
5 Open “Firmware update” under “Services”
6 Select “**Update via LAN**”

7 Enter the IP address of the PC/laptop

8 Click on the “**Run update**” button

The confirmation prompt for the update appears.

9 Click on the “**Yes**” button

The update starts and the progress is displayed as a bar and a percentage.

10 Once the update has been carried out successfully, click on the “**Apply/Save**” button

The update is complete when the “Supply LED” lights up green again.

If the connection to the server fails:
- Deactivate the firewall for the duration of the update
- Retry the update

Services – Opening Wizards

Opening Wizards Under "**Open Wizards**," it is possible to re-open the Solar.web Wizard and the Technician Wizard and run these again.

Settings – General

General

You can enter the charge rate per kWh, the currency, and the expenses per kWh to calculate the yield under "Feed-in payment." The yield is shown in the current Total View.

The date, hour, and minutes can be entered under "System time."
Click on the "**Synchronize**" button to adapt the time displayed in the entry fields of the Datamanager website to the time set on the operating system.
Click on the "**Apply/Save**" button to apply the ✓ time.

The region and location for the time zone can be set under "Time zone settings."

Fields marked with * are mandatory fields.

Settings – Passwords

General

Access to Fronius Datamanager 2.0 is regulated by assigning passwords.
Three different password types are available:
- the administrator password
- the service password
- the user password

Passwords

Administrator Password
User name = admin

The administrator password set during commissioning assigns the user read and write (configuration) access. The user can then open the “Settings” menu item and define any settings as desired, with the exception of the UC Editor and Meter.

When an administrator password is set, the user must enter the user name and password to open the “Settings” menu item.

Service Password
User name = service

The service password is usually assigned in the Commissioning Wizard by the service technician or system installer and provides access to system-specific parameters. The service password is required to adjust meter settings and settings in the UC Editor. If no service password has been assigned, the Meter and UC Editor menu items cannot be accessed.

User Password
After activating the “**Save local site page**” selection field, the user password is displayed; user name = user.

An assigned user password gives the user read access only. The user cannot open the “Settings” menu item.

When assigning a user password, users must enter their username and password every time they connect.

Settings – Network

Internet via WLAN

The networks found are displayed.

Clicking on the Refresh button will conduct a new search for available WLAN networks.

Hidden networks can be added via the "**Add WLAN**" menu.

"Setup" button – used to save a selected WLAN network.
Clicking on this option opens the "WLAN connection" window.

"Remove" button – used to delete a saved WLAN network.

"Configure WLAN IP" button – clicking on this option opens the "Configure IP" window, with the same setting options as for a LAN connection.

“Connect via WPS” button – for connecting to the WLAN via WPS without WLAN password:
1. Activate WPS on the WLAN router (see WLAN router documentation)
2. Click “Connect via WPS” button
3. The WLAN connection is established automatically

Internet via LAN

Setting options:
- “**Obtain address statically**”
  The user has to enter a fixed IP address for the Datamanager (system monitoring), the subnet mask, gateway address, and DNS server address (from the provider).
- “**Obtain address dynamically**”
  The Datamanager (system monitoring) obtains its IP address from a DHCP server (DHCP = dynamic host configuration protocol).
  The DHCP server must be configured so that the Datamanager is always assigned the same IP address. You will then always know the IP address at which the Datamanager (system monitoring) can be found.
  If the DHCP server supports the “DNS dynamic updates” function, a name can be entered for the Datamanager (system monitoring) in the “Host name” field. The connection to the Datamanager (system monitoring) can then be established using the name instead of the IP address.
  For example: Host name = sample_system, Domain name = fronius.com.
  The Datamanager (system monitoring) can be reached via the address “sample_system.fronius.com”.

Local Network via Access Point

The Datamanager (system monitoring) is used as the access point. The PC or smart device connects directly to the Datamanager (system monitoring). Connecting to the internet is not possible.

Settings – Fronius Solar.web

Solar.web

The "**Fronius Solar.web**" menu item can be used to make a direct connection to Fronius Solar.web.

Selecting the storage interval for the fields "**Inverter Query Cycle**" and "**Fronius Sensor Cards Query Cycle**" affects the required storage capacity.

"**Register Solar.web**" button – clicking on this button opens the Fronius Solar.web start page; data relevant for Fronius Solar.web is automatically sent as well.

Memory capacity

The Fronius Datamanager has a memory capacity of up to 5 years and 7 months for a PV system with one inverter and a save interval of 15 minutes.
However, the memory capacity is reduced accordingly depending on the number of inverters and/or Fronius sensor cards/boxes that are integrated into the system.

Calculating memory capacity

1 Determine logging points for inverters and Fronius sensor cards/boxes

$$\text{Logging points per day} = \frac{\text{Logging duration [min]}}{\text{Save interval [min]}}$$

Logging duration [min]
- For inverters: e.g., 14 hours = 840 minutes
- For Fronius Sensor Card/Fronius Sensor Box: 24 hours = 1440 minutes

2 Establish total of logging points

Total of logging points =
= (number of inverters x logging points per day) + (number of Fronius Sensor Cards / boxes x logging points per day)

3 Determine memory sectors per day

$$\text{Memory sectors per day} = \frac{\text{Total of logging points}}{114}$$

4 Round to whole numbers

5 Determine memory capacity

$$\text{Memory capacity [days]} = \frac{2048}{\text{Memory sectors per day}}$$

Calculation example

2 inverters, logging duration = 14 hours (840 minutes)
1 Fronius Sensor Card, logging duration = 24 hours (1440 minutes)

Save interval = 15 minutes

1. Logging points per day:

Inverter logging points = $\frac{840 \text{ min}}{15 \text{ min}} = 56$

Sensor Card logging points = $\frac{1440 \text{ min}}{15 \text{ min}} = 96$

2. Total logging points:

Total logging points = (2 x 56) + (1 x 96) = 208

(2 x 56) ... 2 inverters, (1 x 96) ... 1 Sensor Card

3. Memory sectors per day:

Memory sectors = $\frac{208}{114} = 1{,}825$

4. Rounded:

1,825 ⇨ 2

5. Memory capacity [days]:

Memory capacity = $\frac{2048}{2}$ = 1024 days (= 2 years, 9 months, 18 days)

Memory capacity [days] = $\frac{2048}{\text{Memory sectors per day}}$

Settings - IO Mapping

General

The characteristics of the inverter's individual inputs and outputs (I/O) can be configured in this menu item. Only the settings possible with the respective system can be selected, depending on the range of functions and system configuration.

Any activated output that has not been assigned ("free") will remain active until the inverter is restarted. The status of an output will only change if new specifications are entered for assigned services.

AUS – Demand Response Modes (DRM)

Demand Response Modes for Australia

You can adjust the pins for control via DRM here:

IMPORTANT! To control an inverter via DRM the inverter has to have a Fronius DRM Interface (item number 4,240,005).
Assembly and installation are described in the Installation Instructions of the Fronius DRM Interface. The Installation Instructions for the Fronius DRM Interface are available on the Fronius homepage at:

http://www.fronius.com/QR-link/4204102292

Mode	Description	Information	Default pin
DRM0	Inverter disconnects from the grid	Open grid relay	
	REF GEN	closed	FDI
	COM LOAD	closed	FDI
		or	
		combinations of invalid DRM1–DRM8	
DRM1	$-P_{nom} \leq 0\%$ without disconnection from grid	restricts the effective power consumption	6
DRM2	$-P_{nom} \leq 50\%$	restricts the effective power consumption	7
DRM3	$-P_{nom} \leq 75\%$ & $+Q_{rel}^{*} \geq 0\%$	restricts the effective power consumption and sets the reactive power	8
DRM4	$-P_{nom} \leq 100\%$	normal operation without restriction	9
DRM5	$+P_{nom} \leq 0\%$ without disconnection from grid	restricts the effective power output	6

Mode	Description	Information	Default pin
DRM6	$+P_{nom} \leq 50\%$	restricts the effective power output	7
DRM7	$+P_{nom} \leq 75\%$ & $-Q_{rel}^{*} \geq 0\%$	restricts the effective power output and sets the reactive power	8
DRM8	$+P_{nom} \leq 100\%$	normal operation without restriction	9

FDI on the Fronius DRM interface

* The values for Q_{rel} can be adjusted in the UC Editor menu item.

The nominal device output is always meant when referring to the inverter's remote control capability.

IMPORTANT! If no DRM control (DRED) is connected to Datamanager and the "AUS – Demand Response Mode (DRM)" function is activated, the inverter switches to standby mode.

IO control

The pins for the IO control can be set here. Additional settings can be adjusted in the "PSC editor - IO control" menu.

IO control	Default pin	IO control	Default pin
IO control 1 (optional)	2	IO control 6 (optional)	7
IO control 2 (optional)	3	IO control 7 (optional)	8
IO control 3 (optional)	4	IO control 8 (optional)	9
IO control 4 (optional)	5	IO control feedback (optional)	0
IO control 5 (optional)	6		

Load management

Up to four pins for the load management can be selected here. Further settings for the load management are available in the load management menu item.
Default pin: 1

Settings - load management

General

The outputs I/O 0 - I/O 3 can be used to control an actuator (e.g., relay, contactor) via the load management function.
A connected load can thus be controlled by assigning a power feed-dependent switch-on or switch-off point.

Load management

Control
"**deactivated**": Control via Energy Management is deactivated.
"**by the power generated**": Control via Energy Management takes place through the power generated
"**by excess power (given feed limits)**": Control via Energy Management is effected by excess power (given feed limits).
This option can only be selected if a meter has been connected. If the I/Os have a higher priority than the battery, the possible charging power of the battery is considered to be surplus. In this case, the switching threshold must not be defined on the gateway.

Thresholds
"**on**": For entering an effective power limit at which the I/O output is activated
"**off**": For entering an effective power limit at which the I/O output is deactivated.
If "**by excess power**" is selected under "**Control**," additional selection fields for "**Feed**" and "**Reference**" are displayed under "Thresholds."

Runtimes
"**Minimum runtime for each switch-on process**": Field for entering a minimum time for which the I/O output is to be activated for each switch-on process.
"**Maximum runtime per day**": Field for entering a maximum time for which the I/O output is to be activated in total per day (several switch-on processes are included).

Target runtime
"**per day**": Field for entering a minimum time for which the I/O output is to be activated per day.
"**achieved by**": Field for selecting the time, if the target runtime is to be achieved by a certain time

Status
If the mouse pointer is moved over the status, the reason for the current status is displayed.

IMPORTANT!
If several load outputs are used, they are activated at an interval of one minute depending on the priority (max. 4 rule = max. 4 minutes).

Settings – Push Service

Push Service

This function can be used to export current and log data in different formats or with different protocols to an external server.

Further information about the push service function can be found in the following Operating Instructions:

http://www.fronius.com/QR-link/4204102152

42,0410,2152
Fronius Push Service

Modbus Settings

General

From your web browser, you can use the Fronius Datamanager 2.0 website to apply the Modbus connection settings which cannot be accessed via the Modbus protocol.

Additional Information on the Modbus Function

For additional information on the Modbus function, please see the following Operating Instructions:

http://www.fronius.com/QR-link/4204102049

42,0410,2049
Fronius Datamanager Modbus connection

http://www.fronius.com/QR-link/4204102108

42,0410,2108
Fronius Datamanager Modbus RTU Quickstart Guide

Data Output via Modbus

"**Data output via Modbus**" "**off**"
If the data output via Modbus is deactivated, control commands sent to the inverter via Modbus are reset, e.g., no power reduction or no reactive power specification.

"**Data output via Modbus**" "**tcp**"
If the data output via Modbus is deactivated, control commands sent to the inverter via Modbus are reset, e.g., no power reduction or no reactive power specification.

"**Modbus port**" field – number of the TCP port which must be used for Modbus communication. Presetting: 502. Port 80 cannot be used for this purpose.

"**String Control address offset**" field – offset value for addressing Fronius String Controls via Modbus.

"**Sunspec Model Type**" – used to select the data type of data models for inverters and energy meters.
"**float**" – display as floating-point numbers.
SunSpec Inverter model I111, I112, or I113
SunSpec Meter model M211, M212, or M213
"**int+SF**" – display as integers with scaling factors
SunSpec Inverter model I101, I102, or I103
SunSpec Meter model M201, M202, or M203

IMPORTANT!

Since the different models have different numbers of registers, the register addresses of all the subsequent models also change when the data type is changed.

"**Demo mode**" – the demo mode is used to implement or validate a Modbus master. It enables you to read inverter, energy meter, and String Control data without actually connecting or activating a device. The same data is always sent back for all the registers.

"**Inverter control via Modbus**"
If this option is activated, the inverters can be controlled via Modbus. The "Limit Control" selection field is displayed. Inverter control includes the following functions:
- On/off
- Power reduction
- Setting a constant power factor (cos phi)
- Setting a constant reactive power

"**Data output via Modbus**" set to "**RTU**"

If there is a Modbus energy meter (e.g., Fronius Smart Meter) configured under Settings/ Meter in the system, it will not be possible to use the "RTU" setting.
In this case, data output via Modbus will be deactivated automatically upon selection of "RTU." This change will only be visible once the website has been reloaded.
Any energy meter connected via RS-485 can also be read by Modbus TCP via the corresponding SunSpec models. The Modbus ID for the meter is 240.

"**Interface**" field – Modbus interface 0 (rtu0 | default) or Modbus interface 1 (rtu1) can be selected here.

"**String Control address offset**" field – offset value for addressing Fronius String Controls via Modbus. For further details, see "Modbus Device ID for Fronius String Controls" section.

"**Sunspec Model Type**" – used to select the data model data type for inverters
"**float**" – display as floating-point numbers
SunSpec Inverter model I111, I112, or I113
"**int+SF**" – display as integers with scaling factors
SunSpec Inverter model I101, I102, or I103

IMPORTANT!

Since the different models have different numbers of registers, the register addresses of all the subsequent models also change when the data type is changed.

"**Demo mode**" – the demo mode is used to implement or validate a Modbus master. It enables you to read inverter, energy meter, and String Control data without actually connecting or activating a device. The same data is always sent back for all the registers.

"**Inverter control via Modbus**"
If this option is activated, the inverters can be controlled via Modbus. Inverter control includes the following functions:
- On/off
- Power reduction
- Setting a constant power factor (cos phi)
- Setting a constant reactive power

"**Control priorities**"
Used to specify which service is given priority by the inverter control unit.
1 = highest priority, 3 = lowest priority
The control priorities can only be changed under the "**UC EDITOR**" menu item.

Limit Control

The "Limit Control" option is only available for the TCP transmission protocols.
It is used to block inverter control commands from unauthorized users by only permitting control for specific devices.

"IP address" field
To limit inverter control to one or more devices, enter the IP addresses of the devices which are permitted to send commands to Fronius Datamanager in this field. Multiple entries are separated by commas.

Examples:
- one IP address: ***98.7.65.4*** – control only permitted by IP address *98.7.65.4*
- several IP addresses: ***98.7.65.4,222.44.33.1*** – control only permitted by IP addresses *98.7.65.4 and 222.44.33.1*
- IP address range, e.g., from 98.7.65.1 to 98.7.65.254 (CIDR notation): ***98.7.65.0/24*** – control only permitted by IP addresses *98.7.65.1 to 98.7.65.254*

Save or Reject Changes

✓ Saves the changes and displays a message confirming this.
If you exit the "Modbus" section without saving your changes, all the changes you have made will be rejected.

✕ Prompts you to confirm whether or not you wish to reject the changes you have made and then reinstates the most recently saved values.

Settings – Inverter

Inverter	The data for the Comparison View is defined in the "**Inverter**" menu. If the "**visible**" selection field is selected, the inverter is displayed in the Comparison View.

Settings – Fronius Sensor Cards

Sensor Cards

A specific channel name can be assigned to each sensor value of a Fronius Sensor Card/ Box under "Sensor Cards" (e.g., Wind Speed).

Settings – Counter

General

IMPORTANT! Settings in the “Counter” menu item may only be entered by staff trained to do so!

The service password must be entered for the “Counter” menu item.

Three-phase or one-phase Fronius Smart Meters may be used. In both cases, selection is made via the “Fronius Smart Meter” item. The Fronius Datamanager automatically detects the counter type.

A primary meter or, optionally, multiple secondary meters can be chosen. The primary meter must be configured before a secondary meter can be chosen.

Fronius Smart Meter

When the Fronius Smart Meter is chosen as a counter the field **“Settings”** must be used to set the counter position.

“**Meter position**” at “**Feed-in point**” (1a)
The power of feeding in and energy are measured. The consumption is determined using these values and the system data.

“**Meter position**” in “**Consumption branch**” (1b)
The consumed power and energy are measured directly. The power of feeding in and energy are determined using these values and the system data.

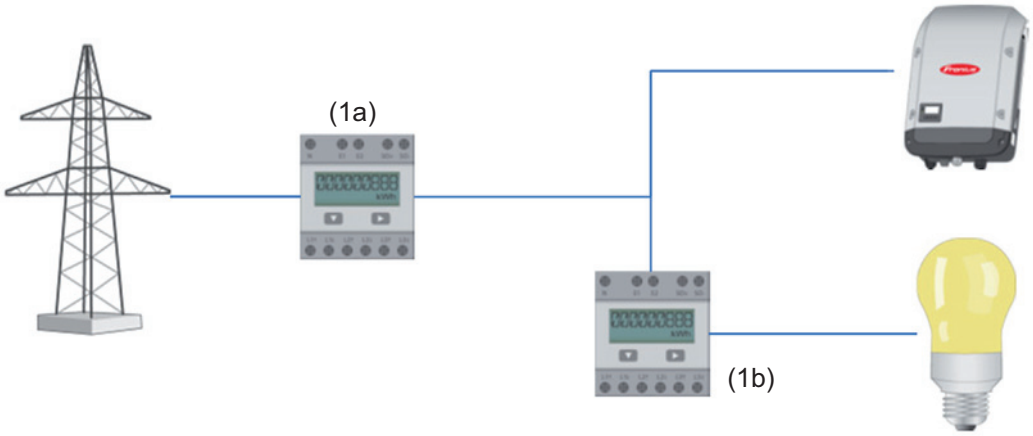

Secondary meter
If a Fronius Smart Meter was chosen as a secondary meter, a window will open to enter the **“Description”** (freely selectable) as well as a “**Modbus address**” field. A value is suggested automatically in the “Modbus address” field (next free address in the address range). The modbus address must not be assigned twice. Click on “**Scan**” after entering.

Connecting the Fronius Smart Meter to the Fronius Datamanager 2.0

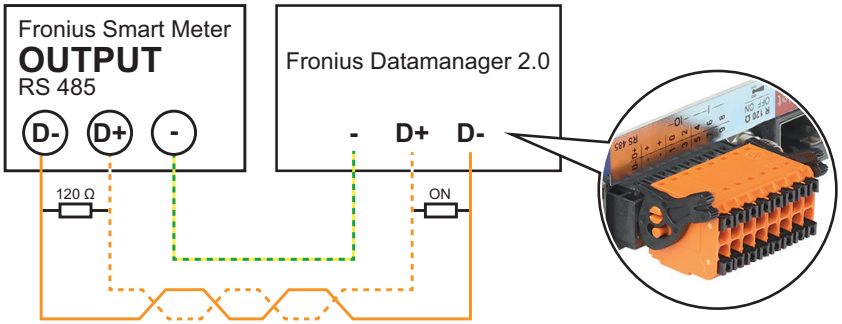

S0 Inverter

"**Meter position**" at "**Feed-in point**" (1a)
The power of feeding in and energy are measured. The consumption is determined using these values and the system data.
A S0 meter must be configured at this point so that the amount of energy fed is counted.

IMPORTANT!
With an S0 meter at the infeed point, the meter data are not displayed in Fronius Solar.web. This option is only provided for dynamic power reduction. The consumption values can be detected to a limited extent when feeding into the grid.

"**Meter position**" in "**Consumption branch**" (1b)
The consumed power and energy are measured directly. The power of feeding in and energy are determined using these values and the system data.
An S0 meter must be configured at this position in order to count the energy consumed.

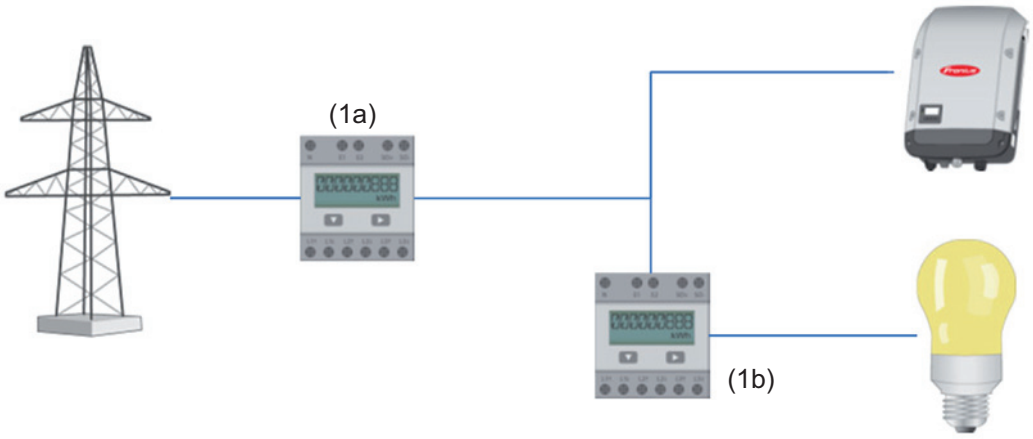

A meter for measuring self-consumption per S0 can be connected directly to the inverter.

IMPORTANT!
An S0 meter is connected to the switchable multi-functional current interface of the inverter. Connecting an S0 meter to the inverter may require an inverter firmware update.

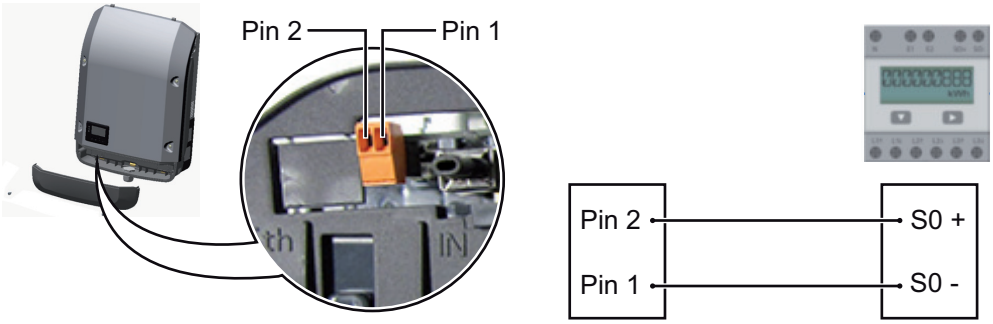

Requirements for the S0 meter:
- Must meet standard IEC 62053-31 Class B
- Max. voltage: 15 V DC
- Max. current when ON: 15 mA
- Min. current when ON: 2 mA
- Max. current when OFF: 0.15 mA

Recommended max. impulse rate of S0 meter:

PV power kWp [kW]	Max. impulse rate per kWp
30	1000
20	2000
10	5000
≤ 5.5	10,000

Settings – DNO Editor

General

In the "UC Editor" menu item, settings relevant to electricity retailers are made.
An effective power limit in % and/or a power factor limit can be set.

IMPORTANT! Settings in the "UC Editor" menu item may only be made by staff trained to do so!

The service password must be entered for the "UC Editor" menu item.

DNO Editor – IO Control

"**Input pattern**" (assignment of individual I/Os)
1 click = white
2 clicks = blue
3 clicks = gray

The virtual IO assignment is displayed as described in the "Settings – IO Assignment" section (see page 71).
The display may be different in older versions of the software.

"**Power factor cos phi**"
"**ind**" = inductive
"**cap**" = capacitive

"**DNO output**" (feedback output)
When the rule is activated, the I/O 0 output will be activated (e.g., for operating a signal device)

"**Excluded inverters**"
Enter the numbers of inverters here that are to be excluded from control. Separate multiple inverters with commas.

Delete/Add a Rule
+ = add a new rule
- = delete the selected rule

"**Import**" button – click to import rules in *.fpc format
The function of the "Import" button depends on the browser used, e.g., Firefox and Google Chrome support the function.

"**Export**" button – click to save the rules separately in *.fpc format.

Connection example

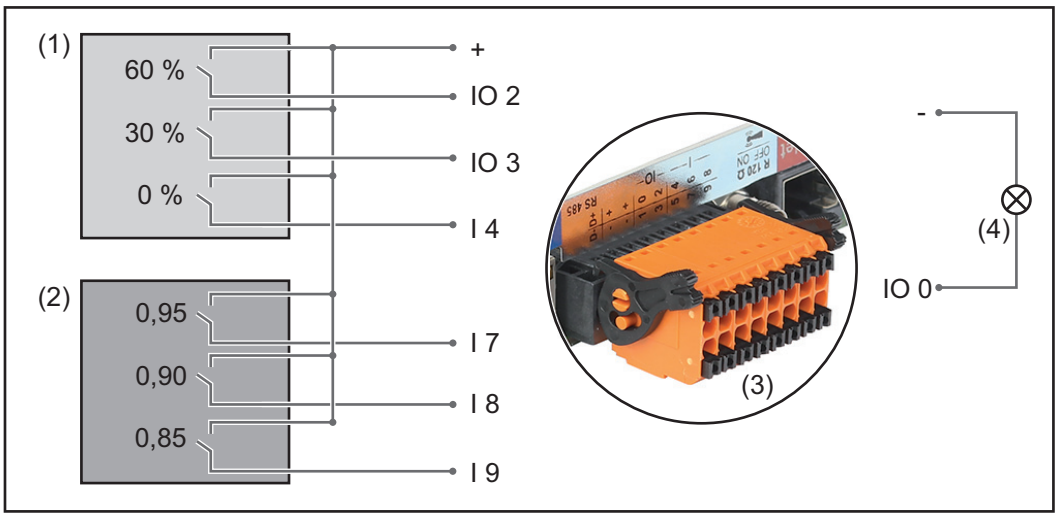

Two ripple control signal receivers, connected to the Fronius Datamanager 2.0 IOs

(1) Ripple control signal receiver with three relays for effective power limitation
(2) Ripple control signal receiver with three relays for power factor limitation
(3) I/Os on the Fronius Datamanager 2.0
(4) Loads (e.g., signal light, signal relay)

The ripple control signal receiver and the Fronius Datamanager 2.0 plug are connected to one another using a 4-pin cable in accordance with the connection diagram.
For distances of greater than 10 m between the Fronius Datamanager 2.0 and the ripple control signal receiver, a shielded cable is recommended.

Six pins must be defined under IO Control under the IO Assignment menu item for this application.

Settings on the DSO Editor:

	Released	Input pattern	Effective power	Power factor cos φ;	UC output	Excluded inverters
		* I1 I2 I3 I4 I5 I6 I7 I8				
(1)	✓	■ □ □ □ □ □ ■ ■	✓ 60 %	☐ 1 ind cap	✓	
(1)	✓	□ ■ □ □ □ □ ■ ■	✓ 30 %	☐ 1 ind cap	✓	
(1)	✓	□ □ ■ □ □ □ ■ ■	✓ 0 %	☐ 1 ind cap	✓	
(2)	✓	□ □ □ ■ □ □ ■ ■	☐ 100 %	✓ 0,95 ind cap	✓	
(2)	✓	□ □ □ □ ■ □ ■ ■	☐ 100 %	✓ 0,9 ind cap	✓	
(2)	✓	□ □ □ □ □ ■ ■ ■	☐ 100 %	✓ 0,85 ind cap	✓	
	☐	■ ■ ■ ■ ■ ■ ■ ■	☐ %	☐ ind cap	☐	

■ ... cannot be used ■ ... not taken into consideration □ ... contact open ■ .. contact closed

Example settings on the DSO Editor for two ripple control signal receiver: (1) Effective power limitation,
(2) Power factor limitation

UC Editor – AUS – Demand Response Modes (DRM)

IMPORTANT! To control an inverter via DRM the inverter has to have a Fronius DRM Interface (item number 4,240,005).
Assembly and installation are described in the Installation Instructions of the Fronius DRM. The Installation Instructions for the Fronius DRM Interface is available on the Fronius homepage on:

http://www.fronius.com/QR-link/4204102292

“Reactive power output”– to enter the reactive power output (= $+Q_{rel}$) for DRM 3 in %

“Reactive power input”– to enter the reactive power input (= $+Q_{rel}$) for DRM 7 in %

UC Editor – Dynamic Power Reduction

UCs or utility companies can prescribe feed-in limits for an inverter (e.g., max. 70% of the kWp or max. 5 kW).
Dynamic power reduction takes into account self-consumption in the household before the power of an inverter is reduced:
- An individual limit can be set.
- A meter for determining self-consumption per S0 can be connected directly to the inverter.
- A Fronius Smart Meter can be connected to the Datamanager at the D-/D+ connections for Modbus data.

“**No limit**” – the photovoltaic system converts all available PV energy and feeds it into the grid.

"**Limit for the entire system**" – the entire photovoltaic system is limited to a fixed power limit.

Field for entering the total DC system power in Wp
This value is used as a control reference and also in case of errors (e.g., meter failure).

Field for entering the max. power in W or % (up to two figures after the decimal place, negative values are also possible)
If no meter has been selected under the “Meter” menu item:
max. power generated for the entire system
If Fronius Smart Meter or S0 inverter has been selected under the “Meter” menu item: max. energy fed into the grid

UC Editor – Control priorities

Used to set control priorities for the ripple control signal receiver, the dynamic power reduction, and the control via Modbus

1 = highest priority, 3 = lowest priority

FRONIUS INTERNATIONAL GMBH
Froniusstraße 1, A-4643 Pettenbach, Austria
E-Mail: sales@fronius.com
www.fronius.com

Under **www.fronius.com/contact** you will find the addresses
of all Fronius Sales & Service Partners and locations

Find your
spareparts online
spareparts.fronius.com